ORIGINAL

MASTER TABLE OF CONTENTS

Section	
Preface	How To Use This Tariff
1	Application of Tariff
2	General Regulations
3	General Description
4	Interoffice Channel Mileage Measurement
5	Reserved for Future Use
6	Reserved for Future Use
7	ACCUNET[sm] T1.5 Service-Interoffice
8	ACCUNET[sm] T45 Service-Interoffice
9	ACCUNET[sm] Spectrum of Digital Service (ASDS)-Interoffice
10	DATAPHONE[sm] Digital Services-Interoffice
11	SONET (Synchronous Optical Network Transport) Services - Interoffice
12	Miscellaneous Functions and Arrangements
13	Additional Administrative and Operational Functions
14	Reserved for Future Use
15	Reserved for Future Use
	Price List

ADMINISTRATIVELY
APPROVED FOR FILING

ORIGINAL

PRICE LIST INDEX

Section		Price List Page
Preface	How To Use This Tariff	
1	Application of Tariff	
2	General Regulations	
3	General Description	
4	Interoffice Channel Mileage Measurement	
5	Reserved for Future Use	
6	Reserved for Future Use	
7	ACCUNET[sm] T1.5 Service-Interoffice	7-8
8	ACCUNET[sm] T45 Service-Interoffice	9
9	ACCUNET[sm] Spectrum of Digital Service (ASDS)-Interoffice	10-19
10	DATAPHONE[sm] Digital Services-Interoffice	20-22
11	SONET (Synchronous Optical Network Transport) Services - Interoffice	23-24
12	Miscellaneous Functions and Arrangements	25
13	Additional Administrative and Operational Functions	26-28
14	Reserved for Future Use	29
15	Reserved for Future Use	30

ADMINISTRATIVELY
APPROVED FOR FILING

ORIGINAL

PREFACE

HOW TO USE THIS TARIFF

EXPLANATION OF SYMBOLS FOR CODING TARIFF REVISIONS

Revisions to this tariff are coded through the use of symbols. These symbols appear in the right margin of the page. The symbols and their meanings are:

(C) To signify changed listing or regulation which may affect rates or charges.

(D) To signify discontinued material, including listing, rate or regulation.

(I) To signify increase.

(M) To signify material relocated from or to another part of the tariff with no change in text, rate or regulation.

(N) To signify new material including listing, rate or regulation.

(R) To signify reduction.

(T) To signify change in wording or text but no change in rate or regulation.

Other marginal codes are used to direct the tariff reader to a footnote for specific information. Codes used for this purpose are lower case letters of the alphabet, e.g., x, y and z. These codes may appear beside the page revision number in the page header or in the right margin opposite specific text.

Trademarks and Service Marks

The following marks, to the extent, if any, used throughout this tariff, are trademarks and service marks of AT&T.

Trademarks	Service Marks
None	DATAPHONE ACCUNET

ADMINISTRATIVELY
APPROVED FOR FILING

ORIGINAL

PREFACE

HOW TO USE THIS TARIFF

EXPLANATION OF ABBREVIATIONS

ac - alternating current

Adm. - Administrator

ASCII - American Standard Code for Information Interexchange

AT&T - American Telephone and Telegraph Company

bps - bits per second

dB - decibel

dc - direct current

DS0 - Digital Signal Level 0

DS1 - Digital Signal Level 1

DS3 - Digital Signal Level 3

FCC - (F.C.C.) Federal Communications Commission

Hz - hertz

IOC - Interoffice Channel

kbps - kilobits per second

kHz - kilohertz

LATA - Local Access and Transport Area

LDMTS - Long Distance Message Telecommunications Service

Mbps - megabits per second

mcs - Microseconds

MF - Multifrequency Pulsing

MHz - megahertz

MTS - Message Telecommunications Service

NPA - Numbering Plan Area

NXX - Local Exchange Central Office Code

PBX - Private Branch Exchange

USOC - Uniform Service Order Code

V & H - Vertical and Horizontal

WATS - Wide Area Telecommunications Service

ADMINISTRATIVELY
APPROVED FOR FILING

PREFACE

HOW TO USE THIS TARIFF

TECHNICAL PUBLICATION INFORMATION

The issue and availability dates of the Technical Publications referenced in this tariff are as follows:

Publication Number	Issue Date	Date Available to Public
41449	March 1986	June 1, 1986
41451	January 1983	May 17, 1983
41451, Addendum	August 1983	September 2, 1983
41458	May 1984	June 25, 1984
41459, Appendix 2	April 1988	May 10, 1988
41459, Addendum	May 1987	May 19, 1987
43202	May 1985	June 1, 1985
43801	November 1982	December 30, 1982
43802	July 1982	August 1, 1982
54014	June 1987	June 1987
54014, Addendum 2	May 1988	May 1988
54015	January 1984	February 1, 1984
54016	March 1986	May 2, 1986
54019	September 1987	October 1987
54019A, Addendum 1	April 1988	April 1988
54070	September 1986	October 28, 1986
54075	August 1985	September 1, 1985
60101	December 1982	January 17, 1983
62120	April 1984	April 1984
62200	June 1983	June 30, 1983
62210	May 1985	September 1, 1985
62310	September 1983	September 16, 1983
2411	October 1985	December 12, 1985
62507	September, 1988	September, 1988
Compatibility Bulletin 106 Issue No. 2	December 1981	March 11, 1982
Compatibility Bulletin 119	October 1979	November 1, 1979
Bellcore Technical Reference TR-NPL 000335, Revision 2	November 1987	November 1987
Bellcore Technical Reference TR-NPL 000336, Issue 1	October 1987	October 1987
L780030	September 1986	September 1986
L780035	September 1988	September 1988
L780036	October 1988	October 1988
L780037	February 1989	February 1989

The Technical Publications listed above may be ordered from:

AT&T CIC
G.P.O. Box 19901
Indianapolis, IN 46219

Bellcore Technical References:
Bellcore Customer Service
60 New England Avenue
Piscataway, N.J. 08854-4196

ADMINISTRATIVELY
APPROVED FOR FILING

ORIGINAL

PREFACE

HOW TO USE THIS TARIFF

GENERAL

This tariff contains regulations and rates applicable to private line services. A private line service consists of the components furnished under this tariff.

TARIFF STRUCTURE

This tariff is subdivided into 15 major sections, which describe the terms, conditions, and rates under which private line services are offered. These sections are:

Section 1. Application of Tariff - defines the scope of this tariff.

Section 2. General Regulations - the general regulations applicable to all services offered in this tariff.

Section 3. General Description - a general description of the types of services offered in this tariff.

Section 4. Interoffice Channel Mileage Measurement - the regulations and procedures for measuring airline mileages for use in rate calculations.

Section 5. Reserved for Future Use

Section 6. Reserved for Future Use

Section 7. ACCUNET® T1.5 Service-Interoffice - a general description and special regulations for T1.5 Service

Section 8. ACCUNET® T45 Service-Interoffice - a general description and special regulations for T45 Service

Section 9. ACCUNET® Spectrum of Digital Service-Interoffice - Description, special regulations and rates.

Section 10. DATAPHONE℠ Digital Service-Interoffice - Desciption, special regulations and rates.

ADMINISTRATIVELY
APPROVED FOR FILING

PREFACE

HOW TO USE THIS TARIFF

ORIGINAL

TARIFF STRUCTURE (Cont'd)

Section 11. SONET Service-Interoffice - Description, special regulations and rates.

Section 12. Miscellaneous Equipment and Arrangements

Section 13. Additional Administrative and Operational Functions - descriptions, special regulations and rates that apply to administrative and operational functions such as Customer-Directed Participative Testing.

Section 14. Reserved for Future Use

Section 15. Reserved for Future Use

Price List Rates and charges applicable for each Private Line Interoffice Service.

LOCATION OF MATERIAL

To locate material in this tariff, refer to the Master Table of Contents for the number of the Section desired.

ABBREVIATIONS AND DEFINITIONS

In the front of this tariff is a list of the abbreviations used in the tariff (see Explanation of Abbreviations, Page 2 of the preface). In addition, the General Regulations section contains a Definitions sub-section which defines certain technical terms and terms which have a specific meaning within the context of this tariff (see Definitions, Section 2).

ADMINISTRATIVELY
APPROVED FOR FILING

PREFACE

HOW TO USE THIS TARIFF

ORIGINAL

TARIFF FORMAT

A. PAGE NUMBERING

Page numbers appear in the upper-right corner of the sheet. Pages are numbered sequentially. When a new page is added between existing pages with whole numbers, a decimal is added. For example, a new page added between pages 34 and 35 would be 34.1.

B. PAGE REVISION NUMBERS

Revision numbers also appear in the upper-right corner of the page. These numbers are used to determine the most current page version on file with the Commission. For example, First Revised Page 34 cancels Original Page 34.

C. NUMBERING SEQUENCE

There are nine levels of alphanumeric coding. Each level is subservient to its next higher level. The following is an example of the numbering sequence used in this tariff.

2
2.1
2.1.1
2.1.1.A.
2.1.1.A.1.
2.1.1.A.1.(a)
2.1.1.A.1.(a)I.
2.1.1.A.1.(a)I.(i)
2.1.1.A.1.(a)I.(i)(1)

D. REFERENCES TO OTHER TARIFFS

Whenever reference is made to other tariffs, sections, subsections or sub-subsections, the location is listed in its entirety (i.e., Section 4.1.1).

When reference is made to an item within the same sub-subsections it is not necessary to repeat the sequence leading to that subsection, only the specific location of the referenced item is listed (i.e., C.1(b) preceding).

ADMINISTRATIVELY
APPROVED FOR FILING

1. APPLICATION OF TARIFF

ORIGINAL

1.1 APPLICATION

1.1.1 GENERAL

This tariff contains a general statement relative to the filing of rates and regulations, the territory served and service rendered, and the availability of tariff schedule pages.

This tariff also lists the Company's tariff schedules on file with the Arizona Corporation Commission.

This tariff contains the regulations and rates applicable to Private Line Services furnished between and within AT&T central offices in Arizona for intrastate communications.

1.1.2 APPLICABILITY

This tariff is applicable to interLATA private line service or channels furnished or made available by the Company, over facilities wholly within or partly within and partly without the State of Arizona, between stations, all of said stations being within the authorized territory of the Company in Arizona.

1.1.3 FILING OF RATES AND REGULATIONS

Rates and charges specified for services offered under this tariff are maximums. Any change to a rate or charge at or below the maximum level shall not be construed as an application to increase rates. Maximum rates may be discounted up to 50%. The rates and charges applicable at any given time are covered in a price list furnished to the Arizona Corporation Commission by the Company.

Not less than 14 days prior to the effective date of any changes in the rates and charges, the Company will furnish the Commission a new price list reflecting the changed rates and charges. New tariff pages would be filed with the Commission for approval only when increasing maximum levels.

ADMINISTRATIVELY
APPROVED FOR FILING

ORIGINAL

1. APPLICATION OF TARIFF

1.1 APPLICATION

1.1.4 TERRITORY SERVED - SERVICE RENDERED - RATES AND REGULATIONS

The Company renders private line services and channels throughout the territory served by it as shown in its tariff schedules which include a description of the service furnished and filed herewith.

Service is furnished to service points within or outside local exchange areas and between the Local Access and Transport Areas (LATAs) in the State of Arizona. Such service points are set forth in the AT&T Business Services Guides.

The procedure which will be followed by the Company in rendering service is set forth in Section 2 which includes definitions explaining phrases and terms used.

Each tariff page bears an issuing date and the date upon which it became effective.

1.1.5 AVAILABILITY OF TARIFF PAGES

A. CURRENT TARIFF PAGES

1. Current Tariff Pages Approved and Accepted by the Arizona Corporation Commission:

   a. The master copy of each tariff page with the effective date is filed at the Company's headquarters building, 795 Folsom Street, San Francisco, California 94107.

   b. Copies of each effective tariff page accepted and approved by the Arizona Corporation Commission may be obtained at a charge from tariff vendors. A list of the vendors may be obtained by writing:

      Staff Manager - Tariff Administration
      AT&T Communications of California, Inc.
      795 Folsom Street, Room 250
      San Francisco, California 94107

2. Interested parties may obtain copies, when filed by the Company, of a specific advice letter and each associated tariff page, or a copy of all subsequent advice letters and their associated tariff pages for specified schedules on an annual basis, at a charge as indicated in 1(b) preceding.

ADMINISTRATIVELY
APPROVED FOR FILING

ORIGINAL

2. GENERAL REGULATIONS

2.1 UNDERTAKING OF THE COMPANY

2.1.1 SCOPE

A. APPLICABILITY

1. This Tariff contains general regulations applicable to private line services and channels. A private line service permits the transmission of communications between two or more locations. It is comprised of one or more channels and may include miscellaneous equipment and arrangements. Definitions are included explaining terms and phrases used.

2. The following general regulations and definitions are applicable to intrastate private line services and channels furnished by AT&T Communications of The Mountain States, Inc., hereinafter referred to as the Company, within the territory served in Arizona and are in addition to the rates and specific regulations contained in the particular schedules listed below governing the respective channels.

B. FACILITIES OF OTHER COMPANIES

1. Special Construction

Certain services offered in this Tariff are subject to the availability of suitable facilities from the Local Exchange Company. In some instances in order to provide a service in response to aCustomer's order, this Company may incur charges and/or liabilities in the Local Exchange Company's special construction tariff schedule. If that occurs, service is furnished on the basis that the Customer agrees to assume such charges and/or liabilities if:

they order the installation to be made after being advised that special construction will be involved. In addition, this schedule sets forth the regulations under which the Company anticipates to be able to provide a service(s) which requires facilities from the Local Exchange Company. However, such service(s) will not be provided if facilities can not be obtained from a Local Exchange Company because a condition over which a Customer has control (e.g. hazardous locations, etc.) violates a regulation in the Local Exchange Company's Access Tariff.

C. TRANSMITTING MESSAGES

The Company offers the use of its facilities for communications between its Customers. The Company is responsible for engineering, operating and maintaining the services it provides from premises to premises. It is not responsible, for through transmission when Customer premises equipment or communications systems are connected to a service.

ADMINISTRATIVELY
APPROVED FOR FILING

2. GENERAL REGULATIONS

ORIGINAL

2.1 UNDERTAKING OF THE COMPANY (Cont'd)

2.1.2 SERVICE LIABILITIES

A. PRIORITY OF SERVICE

Service furnished under this tariff is subject to any lawful limitation that may be imposed by a branch, agency or officer of the U.S. Government.

In case a shortage of facilities exists at any time either for temporary or protracted periods, the establishment of message telecommunications service shall take precedence over all others.

The furnishing of service under this tariff may require certain physical arrangements of the facilities of the Company and is therefore subject to the availability of such facilities.

B. LIMITATION OF LIABILITY

1. The liability of the Company for damages arising out of mistakes, omissions, interruptions, delays or errors or defects in transmission occurring in the course of furnishing service and not caused by the negligence of the Customer, or of the Company, in failing to maintain proper standards of maintenance and operation and to exercise reasonable supervision shall in no event exceed an amount equivalent to the proportionate charge to the Customer for the period of service during which such mistake, omission, interruption, delay or error or defect in transmission occurs.

2. The Company shall be indemnified and saved harmless by the Customer against:

   a. Claims for libel, slander and infringement of copyright arising from the material transmitted over the facilities;

   b. Claims for infringement of patents arising from combining with, or using in connection with, facilities furnished by the Company, apparatus and systems of the Customer; and

   c. all other claims arising out of any act or omission of the Customer in connection with the facilities provided by the Company.

ADMINISTRATIVELY
APPROVED FOR FILING

2. GENERAL REGULATIONS

ORIGINAL

2.1 UNDERTAKING OF THE COMPANY (Cont'd)

2.1.2 SERVICE LIABILITIES (Cont'd)

B. LIMITATION OF LIABILITY (Cont'd)

3. The Company is not liable for any act or omission of the other company or companies furnishing a portion of the service.

4. The Company's failure to provide or maintain services under this tariff shall be excused by labor difficulties, governmental orders, civil commotions, preemption of existing services to restore services in compliance with Part 64, Subpart D, of the F.C.C.'s Rules and Regulations, acts of God and other circumstances beyond the Company's reasonable control, subject to Credit Allowance for interruptions provision of this tariff.

5. The company does not guarantee nor make any warranty with respect to equipment provided by it for use in an explosive atmosphere. The Customer indemnifies and holds the Company harmless from any and all loss, claims, demands, suits or other action, or any liabilty whatsoever, whether suffered, made, instituted or asserted by the Customer or by any other party or persons, for any personal injury to or death of any person or persons, and for any loss, damage or destruction of any property, whether owned by the Customer or others, caused or claimed to have been caused directly or indirectly by the installation, operation, failure to operate, maintenance, removal, presence, condition, location or use of said equipment so provided.

   The Company may require each Customer to sign an agreement for the furnishing of such equipment as a condition precedent to the furnishing of such equipment.

6. The Company is not liable for any defacement of or damge to the premises of a Customer (or authorized user) resulting from the furnishing of channel facilities of the attachment of the apparatus furnished by the Company on such premises or by the installation or removal thereof, when such defacement or damage is not the result of negligence of the agents or employees of the Company.

7. The Company's failure to provide or maintain services under this tariff shall be excused by labor difficulties, governmental orders, civil commotions, preemption of existing services to restore services in compliance with Part 64, Subpart D, of the F.C.C.'s Rules and Regulations, acts of God and other circumstances beyond the Company's reasonable control, subject to the Credit Allowance for Interruptions provisions of this tariff.

ADMINISTRATIVELY
APPROVED FOR FILING

2. GENERAL REGULATIONS

ORIGINAL

2.1 UNDERTAKING OF THE COMPANY (Cont'd)

2.1.3 PROVISION OF SERVICE

A. THE SERVICE

Private line service is that of furnishing, for the communication purposes of the Customer and authorized users, channels and facilities between specified locations for a continuous period or for regularly recurring periods at stated hours; it is furnished on a tariff basis subject to the availability of such facilities and the requirements of the Company's message telecommunications service.

B. COMBINATIONS OF CHANNELS USED FOR A SINGLE PURPOSE

Where a combination of two or more channels is necessary to provide channel facilities for a single purpose, charges are determined upon the basis of the types and number of channels required.

C. THE FURNISHING OF CHANNELS

1. The Company will furnish channels for specific purposes between two or more designated premises, as described hereinafter, on a tariff basis, subject to the availability of facilities and the requirements of the Company's message telecommunications service and subject to such other conditions as are specified in these regulations and in the particular tariff schedules governing the respective channels.

   a. Engineering, Installation and Maintenance - The Company fully supports the services provided in this schedule through engineering, installation and maintenance efforts. No other party is authorized to perform those functions or to rearrange, disconnect or remove a service without the Company's written consent. The Company will assure that each service functions properly within its specified transmission, signaling or switching parameters. The technical characteristics and specifications for each type of service are described in the respective service sections.

ADMINISTRATIVELY
APPROVED FOR FILING

2. GENERAL REGULATIONS

ORIGINAL

2.1 UNDERTAKING OF THE COMPANY (Cont'd)

2.1.3 PROVISION OF SERVICE (Cont'd)

C. THE FURNISHING OF CHANNELS (Cont'd)

a. Engineering, Installation and Maintenance (Cont'd)

I. Engineering - The Company will engineer circuits to meet its transmission parameters (e.g., data transmission rate) or equipment specifications. At the Customer's request, the Company will also make available certain technical information (e.g., interface specifications) in the form of Technical Publications.

II. Installation - A circuit will be installed subject to the availability of installation personnel, channels and equipment. Installations will usually be made during normal working hours. If the Customer requests that an installation be made at times which require overtime payment to installation personnel, additional charges, as shown in Section 13 will apply.

III. Maintenance - Maintenance will be provided as required for an interrupted service.

D. SINGLE SERVICE AND DUPLEX SERVICE

1. The Company will furnish channels arranged for single service operation or for duplex service operation as ordered by the Customer.

Rates and charges as set forth in the tariff schedules apply, as appropriate, for the type of operation ordered, except that rates and charges as for duplex service operation will be applicable for those cases where:

a. The type of terminal arrangements proposed for use by the Customer require facilities similar to those provided for duplex service operation; or

b. when the Customer specifically orders facilities similar to those provided for duplex service operation even though the Customer's service requirement is for single service operation.

E. MILEAGE MEASUREMENTS

Airline mileage measurements used in the determination of charges are based on V&H coordinates as specified in the AT&T Business Services Guides.

ADMINISTRATIVELY
APPROVED FOR FILING

ORIGINAL

2. GENERAL REGULATIONS

2.1 UNDERTAKING OF THE COMPANY (Cont'd)

2.1.4 SPECIAL CONSTRUCTION AND ARRANGEMENTS

A. CONSTRUCTION CHARGES

1. All rates and charges quoted in the tariff schedules provide for the furnishing of service or channels when suitable facilities are available or where the construction of the necessary facilities does not involve unusual costs.

2. When the revenue to be derived from the service or channels is not, in the opinion of the Company, sufficient to warrant the Company assuming the unusual costs of providing the necessary construction, the Customer may be required to pay all or a portion of such costs, the amount depending upon the circumstances in each case. Special construction charges will be based on costs incurred in addition to all other applicable charges. In cases involving special construction, the Company reserves the right to require a minimum period longer than one month at the same location.

B. WORK PERFORMED OUTSIDE REGULAR WORKING HOURS

All rates and charges specified in this tariff contemplate that work will be performed during regular working hours. If, at the request of the Customer, work is performed outside of regular working hours, the Customer may be required to pay any additional costs incurred.

2.1.5 TELECOMMUNICATIONS SERVICE PRIORITY (TSP)

The use and restoration of service shall be in accordance with Part 64 Subpart D of the Federal Communications Commission's Rules and Regulations, and Chapter II, Title 47 of the Code of Federal Regulations, which specifies the priority system of such activities.

2.2.6 APPLICATION FOR SERVICE

Applications for establishment or changes of service may be made to the Company verbally or in writing.

The Company reserves the right to refuse an application for service made by a Customer who is indebted to the Company for service previously furnished, until the indebtedness is satisfied.

ADMINISTRATIVELY
APPROVED FOR FILING

2. GENERAL REGULATIONS

ORIGINAL

2.2 OBLIGATIONS OF THE CUSTOMER

2.2.1 CUSTOMER RESPONSIBILITIES

A. INFORMATION CUSTOMER MUST PROVIDE

When a Customer places an order for a service the following minimal information must be provided so the Company can design, install, bill and maintain the service or arrangement ordered:

1. The category of private line service, interface and signaling (if required).

2. The AT&T central offices involved, when access is provided by the Customer.

3. The service period (for other than month-to-month private line services).

4. The Customer's billing name and address, and

5. the design information contained in the design layout record for other access when an order is placed to connect other access without the Access Coordination Function.

B. OWNERSHIP AND USE OF EQUIPMENT

Equipment, instruments and lines on the premises of a Customer (or authorized user) furnished by the Company are the property of the Company whose agents and employees shall have the right to enter said premises at any reasonable hour for the purpose of installing, inspecting or repairing the instruments and lines or upon termination of the service or channel, for the purpose of removing such instruments and lines.

C. USE FOR OTHERS

The service or channel shall not be used by the Customer or authorized user in the collection, transmission or delivery of any communications for others.

ADMINISTRATIVELY
APPROVED FOR FILING

2. GENERAL REGULATIONS

2.2 OBLIGATIONS OF THE CUSTOMER (Cont'd)

ORIGINAL

2.2.1 CUSTOMER RESPONSIBILITIES

D. DAMAGE TO A PRIVATE LINE SERVICE

The Customer must pay AT&T for replacement or repair of a private line service when damage results from:

- The negligence or willful act of the Customer or others authorized by the Customer.
- Improper use of the private line service.
- Any use of equipment or systems provided by the Customer or others authorized by the Customer.

After receipt of payment for the damages, AT&T will cooperate with the Customer in its claim against any third party causing the damage.

2.2.2 REARRANGEMENTS AND REPAIRS

A. MAINTENANCE AND REPAIRS

All ordinary expense of maintenance and repairs, in connection with equipment, facilities and services furnished by the Company, unless otherwise specified in the Company's tariff schedules, is borne by the Company. In case of damage, loss or destruction of any of the Company's facilities due to the negligence or willful act of the Customer (or authorized user) and not due to ordinary wear and tear or to fire or other causes beyond the control of the Customer, the Customer shall be responsible for the cost of replacing the equipment destroyed or for the cost of restoring the equipment to its original condition. A Customer (or authorized user) may not rearrange, disconnect, remove or attempt to repair or permit others to rearrange, disconnect, remove or attempt to repair any apparatus or wiring provided by the Company, except upon the written consent of the Company.

B. TESTING AND ADJUSTING

Periodically, at a time agreeable to both the Customer and the Company, the facilities provided by the Company shall be available to the Company to make such tests and adjustments as may be necessary to maintain them in satisfactory operating condition; no interruption allowance will be made to the Customer for the time during which such tests and adjustments are made.

ADMINISTRATIVELY
APPROVED FOR FILING

2. GENERAL REGULATIONS

2.2 OBLIGATIONS OF THE CUSTOMER (Cont'd)

ORIGINAL

2.2.3 TRANSFER OF SERVICE

A. SUPERSEDURE

A private line service may be transferred or assigned to a new Customer provided that:

1. The Customer of record (former Customer) requests in writing that AT&T transfer or assign the private line service to the new Customer.

2. The new Customer notifies AT&T in writing that it agrees to assume all obligations of the former Customer at the time of transfer or assignment. These obligations include: (1) all outstanding indebtedness for the private line service, (2) the unexpired portion of any applicable minimum payment period(s), and (3) any applicable termination liability(ies).

3. The private line service is not interrupted or relocated at the time the transfer or assignment is made.

   The transfer or assignment does not relieve or discharge the former Customer from remaining jointly and severally liable with the new Customer for any obligations existing at the time of transfer or assignment. These obligations include: (1) all outstanding indebtedness for the private line service, (2) the unexpired portion of any applicable minimum payment period(s), and (3) any applicable termination liability(ies).

ADMINISTRATIVELY
APPROVED FOR FILING

2. GENERAL REGULATIONS

ORIGINAL

2.3 PAYMENT ARRANGEMENTS AND CREDIT ALLOWANCE

2.3.1 PAYMENT OF CHARGES AND DEPOSITS

A. ADVANCE PAYMENTS

1. An advance payment will be required before a private line service is provided only when a Customer has a history of late payments to AT&T or when a Customer's financial responsibility is not a matter of record. The advance payment will equal the charges for the minimum payment period and/or one month's estimated usage charges. In addition, the advance payment will include an amount equal to the estimated non-recurring charges and one month's recurring charges (if any) when special construction is involved.

2. The amount of the advance payment will be credited to the Customer's account and applied to any indebtedness under the contract for service and facilities furnished, and for service charges.

3. Advance payments will not ordinarily be required at the time of application for new service in the case of government departments or other applicants whose credit is known to be satisfactory. Present Customers whose credit is satisfactory in the exchange in which they have service will not be required to make advance payments at the time of application for new service in the same exchange or elsewhere; nor in the case of moves of, additions to, or changes in their present service or facilities.

B. PAYMENT FOR SERVICE

1. The Customer is required to pay all charges for service in accordance with the Company's regular billing and collection practices.

2. Unless otherwise specified in this tariff, all charges for service and facilities are payable monthly in advance except that the Company reserves the right to require payment of such damages at more frequent intervals.

3. Except as otherwise specified in this tariff, where the rate to be charged for a particular service is determined by applying a percentage or similar factor to a quoted rate, and such computation results in a fraction, the charge for the service shall be computed to the nearest cent, a half cent being increased to the next higher cent.

ADMINISTRATIVELY
APPROVED FOR FILING

2. GENERAL REGULATIONS

ORIGINAL

2.3 PAYMENT ARRANGEMENTS AND CREDIT ALLOWANCE (Cont'd)

2.3.1 PAYMENT OF CHARGES AND DEPOSITS (Cont'd)

B. PAYMENT FOR SERVICE

4. In the event that payment from a Customer is less than the total amount of all charges owing to the Company and the Customer does not specifically designate the manner in which he wishes to apply said payment, then the Company may apply all or any part of the payments received to such accounts or indebtedness in any manner that the Company desires.

5. In the event it becomes necessary for service to be discontinued to a Customer for nonpayment, a written notice of at least seven calendar days (measured from the day following the date of mailing) must be given advising the Customer of the amount due and the date by which the same must be paid. If the Customer fails to pay or make suitable arrangements for payment by said date, the Company may suspend the service or discontinue the service and remove any or all of its equipment from the Customer's premises.

6. Payment of bills for telephone service shall be made at an office of the Company or to a duly authorized collector of the Company. All charges for service are payable only in lawful money of the United States. Payment by check may be allowed, but payment by a check which is not honored or paid by the drawee bank will be considered as nonpayment.

7. The Company may refuse to provide service or, where service is presently provided, may discontinue service for failure of an applicant or Customer to comply with these tariff regulations, the Arizona Corporation Commission's rules, municipal ordinances, or any law pertaining to telephone service.

ADMINISTRATIVELY
APPROVED FOR FILING

2. GENERAL REGULATIONS

ORIGINAL

2.3 PAYMENT ARRANGEMENTS AND CREDIT ALLOWANCE (Cont'd)

2.3.1 PAYMENT OF CHARGES AND DEPOSITS (Cont'd)

C. DEPOSITS

1. When the Company deems it necessary, in protecting its earned revenues, an applicant for service or a present Customer may be required to make and keep intact a deposit in such amount as may be required from time to time by the Company as a guarantee of the payment of charges for services furnished, or as guarantee of the fulfillment of a contract which, due to special conditions, is written for a period in excess of the normal minimum contract period. The fact that a deposit has been made shall in no way relieve the applicant or Customer from complying with the regulations of the Company as to advance payments and prompt payment of bills on presentation, nor constitute a waiver or modification of the regular practices of the Company providing for the termination of a contract for service on account of nonpayment of any sums due the Company for services furnished.

2. The deposit will bear simple interest at the rate of 6 percent a year, payable on the actual amount on deposit with the Company.

3. When the contract for the services is terminated, the amount of the deposit with interest computed from the date of its receipt by the Company to the date of termination of the contract will be returned to the Customer less such sums as may be due the Company for services furnished. However, if the Company deems the deposit, or a portion thereof, no longer necessary, it may return the deposit, or a portion thereof, prior to termination of the contract, in which case interest will be computed to the date of the notice to the Customer that the deposit, or a portion thereof, will be returned to the Customer.

ADMINISTRATIVELY
APPROVED FOR FILING

2. GENERAL REGULATIONS

ORIGINAL

2.3 PAYMENT ARRANGEMENTS AND CREDIT ALLOWANCE (Cont'd)

2.3.2 CANCELLATION FOR CAUSE

A. NONPAYMENT AND VIOLATION OF REGULATIONS

AT&T may terminate service, with written notice 5 days, prior to termination, due to:

1. Nonpayment of any sum due the Company beyond the payment date.
2. Abandonment of the service.
3. The use of foul or obscene language.
4. Impersonation with intent to defraud.
5. Interfering with the service of others in any way.
6. The use of the service to harass another.
7. If any law enforcement agency advises the Company that the service is being used for unlawful purposes.

AT&T may terminate service, without written notice, due to the violation of Tariff regulations.

ADMINISTRATIVELY
APPROVED FOR FILING

ORIGINAL

2. GENERAL REGULATIONS

2.3 PAYMENT ARRANGEMENTS AND CREDIT ALLOWANCE (Cont'd)

2.3.3 MINIMUM SERVICE PERIOD AND FRACTIONAL RATES AND CHARGES

A. MINIMUM SERVICE PERIOD

Unless otherwise indicated in a particular schedule, the minimum service period of a service or channel is one month except when the cost of construction is such as to necessitate a longer service period. In the latter case the Company may require execution of a contract with a minimum period greater than one month.

B. CHARGE PERIODS

Where the minimum service period is one month, the minimum charge will be for one month. If the period of use exceeds one month, the charges for any fractional period following and consecutive with the full month, will be prorated on the basis of the number of days in the period in question to thirty (30) days in the billing month.

Where a basic termination charge is stated in the schedules as being reduced by a specified ratio for each month of service, the minimum service period for such service is one month. If the period of use exceeds one month, any fractional period of less than a full month will be prorated on the basis of the number of days in the period in question to thirty (30) days.

ADMINISTRATIVELY APPROVED FOR FILING

ORIGINAL

2. GENERAL REGULATIONS

2.3 PAYMENT ARRANGEMENTS AND CREDIT ALLOWANCE (Cont'd)

2.3.3 MINIMUM SERVICE PERIOD AND FRACTIONAL RATES AND CHARGES (Cont'd)

C. COMPUTING FRACTIONAL CHARGES OR CREDITS FOR A RATE CHANGE

When a monthly rate is changed (increased or decreased) as a result of a tariff revision, the additional charge or credit is calculated as follows.

1. Monthly Rates

For any fractional part of a month, count the number of days remaining in the billing period (including the 31st day of a 31-day month) starting with the effective date of the rate change. Divide that figure by 30 days (billing month). The resultant fraction is then multiplied by the amount of the monthly rate change to arrive at the fractional charge or credit for the rate change.

Example: Rate change effective on the 12th day of the 28 day month.

Old Monthly Charge	=	$1,000.00
No. of Days Remaining in Billing Period	=	17 Days
Billing Month	=	30 Days
Fractional Part of Month Billed at the New Rate	=	$\frac{17}{30}$
Rate Change	=	$60 monthly increase
Fractional Charges or Credit for the Rate Change	=	$\frac{17}{30}$ x $60 = $34.00
Billing for the Month in which the Rate Change Occurred (for a rate decrease subtract the fractional charges)	=	$1,000 + $34 = $1,034.00
Subsequent New Monthly Charges	=	$1,000 + $60 = $1,060.00

In the above example, the number of days remaining in the billing period would be 19 for a 30-day month and 20 for a 31-day month. The same process would be used for computing the fractional monthly charge or credit.

ADMINISTRATIVELY APPROVED FOR FILING

ORIGINAL

2. GENERAL REGULATIONS

2.3 PAYMENT ARRANGEMENTS AND CREDIT ALLOWANCE (Cont'd)

2.3.3 MINIMUM SERVICE PERIOD AND FRACTIONAL RATES AND CHARGES (Cont'd)

D. ROUNDING TO THE NEAREST CENT

If the computed charge(s) or credit include one-half cent or more, the fraction is rounded up to the next higher cent. Fractions of less than one-half cent are disregarded.

E. COMPUTING CHARGES OR CREDITS FOR A FRACTIONAL PART OF A MONTH

When rates are stated on a monthly basis, each month is considered to have 30 days for billing purposes. Charges or credits for a fractional part of a month are calculated by counting the number of days remaining in the billing period after the private line service is furnished or has been discontinued. The number of days remaining in the billing period (including the 31st day of a 31-day month, if applicable) are counted starting with the day after the date on which the private line service was furnished or discontinued. Divide that figure by 30 days. The resultant fraction is then multiplied by the monthly charge to arrive at the fractional monthly charge or credit.

Example: Private line service furnished/discontinued on the 15th day of a 30-day month.

Monthly Charge	=	$1,000.00
No. of Days Remaining in Billing Period	=	15 days
Billing Month	=	30 days
Fractional Monthly Charge/Credit Charge	=	$\frac{\text{No. of Days Remaining in Billing Period}}{\text{Billing Month}} \times \text{Monthly}$
Fractional Monthly Charge/Credit	=	$\frac{15}{30} \times \$1{,}000.00$
Fractional Monthly Charge/Credit	=	$500.00

In the above example, the number of days remaining in the billing period would be 13 for a 28-day month and 16 for a 31-day month. The same process would be used for computing the fractional monthly charge or credit.

ADMINISTRATIVELY APPROVED FOR FILING

2. GENERAL REGULATIONS

ORIGINAL

2.3 PAYMENT ARRANGEMENTS AND CREDIT ALLOWANCE (Cont'd)

2.3.4 CANCELLATION, DELAY OR CHANGE OF AN ORDER

The regulations set forth in this section for the cancellation, delay or change of an order apply to all private line service components.

When an order for a private line service is placed, a due date will be established. That due date will be confirmed with the Customer. In the event that a due date is delayed as set forth in A. or B. following, the due date for the order will be changed to reflect the number of days of delay or advance, as appropriate.

A. DELAY OF A DUE DATE BY THE CUSTOMER

A Customer may delay the due date of an order involving the installation, move or rearrangement of a private line service when:

- Paragraph B. following is not applicable and the request for the delay is received by AT&T prior to the order's due date, and

- the total delay measured from the order's initial due date does not exceed 30 cumulative calendar days.

Orders involving the discontinuance of a private line service may be delayed at any time prior to the due date. There will be no maximum delay period for these orders.

1. Maximum Delay Period

When the Customer has delayed an order for the maximum 30 cumulative calendar day period, the order may not be delayed again by the Customer. In such case, unless B. following applies, the Customer has the option to (1) accept billing for the private line service ordered, or (2) cancel the order and pay the applicable cancellation charge for the private line service ordered. The billing or cancellation charge is effective on the 30th cumulative calendar day of the delay.

If the Customer elects to accept billing, the installation will be completed as soon as reasonably practical after the Customer advises AT&T that the installation can be completed.

B. DELAY OF A DUE DATE BY AT&T

AT&T will make every reasonable effort to assure that the private line service ordered is furnished on the due date. However, in some cases a delay in the installation may be unavoidable. If an order is delayed beyond its due date for more than 30 cumulative calendar days and such delay is not requested or caused by the Customer, the Customer may cancel the order without cancellation charges applying.

ADMINISTRATIVELY
APPROVED FOR FILING

2. GENERAL REGULATIONS

ORIGINAL

2.3 PAYMENT ARRANGEMENTS AND CREDIT ALLOWANCE (Cont'd)

2.3.4 CANCELLATION, DELAY OR CHANGE OF AN ORDER (Cont'd)

C. CANCELLATION OF AN ORDER

A critical date schedule is established by AT&T for each private line service order placed by a Customer. AT&T uses this schedule to identify key activities in the service order process, to monitor the progress of the installation, and to administer the schedule of cancellation charges. Critical date schedules may vary between service orders. The specific critical dates which have been established for a given order can be obtained from the Customer's AT&T sales negotiator.

The critical dates monitored by AT&T are:

- Application Date (APP): The date on which the Customer provides a firm commitment and sufficient information to AT&T to proceed with issuance of a firm order for service.

- Scheduled Issue Date (SID): The date on which the service order is entered into AT&T's service order distribution system.

- Design Layout Report Date (DLRD): The date on which the Design Layout Report (DLR) or access interface information is received by AT&T from the LEC.

- Records Issue Date (RID): The date on which all circuit design and assignment information is sent to the central office installation force.

- Wired and Office Tested Date (WOT): The date by which all intraoffice wiring is completed, all plug-ins are optioned and aligned, and frame continuity is established.

- Circuit Test and Acceptance (CTA) Date: The date on which overall testing of the service is completed.

- Due Date (DD): The date that has been established for completion of the installation of a private line service.

If an order for a private line service is canceled by the Customer prior to the SID, no charge applies. For cancellations by the Customer on or after the SID, a cancellation charge will apply. The amount of the cancellation charge will vary according to the category of service ordered and the date reached in the critical date schedule.

ADMINISTRATIVELY
APPROVED FOR FILING

2. GENERAL REGULATIONS

ORIGINAL

2.3 PAYMENT ARRANGEMENTS AND CREDIT ALLOWANCE (Cont'd)

2.3.4 CANCELLATION, DELAY OR CHANGE OF AN ORDER (Cont'd)

C. CANCELLATION OF AN ORDER

Cancellation charges applicable to the components of each category of private line service are listed in the service-specific sections of this tariff.

If the Customer or AT&T delays the due date of an order, in accordance with Section 2.3.4.A. or B. preceding, the critical date schedule for the order will be revised for those critical dates not yet passed. Subsequent cancellation of the delayed order by the Customer will cause a cancellation charge based on the revised schedule to be incurred.

2.3.5 CHANGE IN SERVICE ARRANGEMENTS

A. APPLICATION OF CHARGES

1. When a change in service arrangement involves the continued use by the Customer of channels or facilities furnished by the Company, nonrecurring or installation charges, provided in schedules listed in Section 2.1.1.A. (Applicability) do not apply to the channels or facilities continued in use. Continued use of such channels or facilities on a service is considered to exist when:

   a. The service arrangement or a portion of the service arrangement is reused on an existing service or to establish a new service for the same Customer, or

   b. the service arrangement or a portion of the service arrangement remains intact when the Customer, as defined herein, is changed due to corporate merger or outright purchase, or

   c. the portion of the service arrangement connecting User's or Other Common Carrier's premises to a Customer's service is transferred to a service of another Customer,

   Provided that:

   I. There is no break in the continuity of the service.

   II. No retermination or change of the service terminals or local channels provided at the Customer's, User's or Other Common Carrier's premises, or at the Company central office takes place, and

   III. no change in the design, operation or function of channels or facilities takes place.

ADMINISTRATIVELY
APPROVED FOR FILING

2. GENERAL REGULATIONS

ORIGINAL

2.3 PAYMENT ARRANGEMENTS AND CREDIT ALLOWANCE (Cont'd)

2.3.5 CHANGE IN SERVICE ARRANGEMENTS (Cont'd)

A. APPLICATION OF CHARGES (Cont'd)

2. The minimum service period for the service continued in use is determined from the date of initial installation thereof.

3. When the Customer requests a change in service arrangement which results in a change in the design, operation or function of the channels or facilities of Company-provided private line service offered herein, a charge equivalent to the installation charges for channel terminations or service terminals applicable to the type service involved applies. However, such charges will not apply for those changes for which installation charges, as set forth in schedules listed in Section 2.1.1.A. (Applicability), are otherwise applicable.

ADMINISTRATIVELY
APPROVED FOR FILING

2. GENERAL REGULATIONS

ORIGINAL

2.3 PAYMENT ARRANGEMENTS AND CREDIT ALLOWANCE (Cont'd)

2.3.6 ALLOWANCE FOR INTERRUPTIONS

A. GENERAL

A credit allowance will be given when a private line service is interrupted, except as specified in B. following. An interruption period begins when the Customer reports a private line service to be interrupted and releases it for testing and repair. An interruption period ends when the private line service is operative. If the Customer reports a private line service to be inoperative but declines to release it for testing and repair, it is considered to be impaired, but not interrupted.

In addition, there are specific credit allowance regulations that only apply to a particular private line service. Those regulations are specified in the section of the tariff which is applicable to the specific private line service.

B. LIMITATIONS

Credit allowance does not apply for:

1. Interruptions caused by the negligence of the Customer or others authorized by the Customer to use the Customer's service.

2. Interruptions due to the failure of power, equipment, systems or connections not provided by AT&T.

3. Interruptions during any period when the Customer or User has released a private line service for maintenance or rearrangement purposes, or for the implementation of a Customer order.

4. Interruptions during periods when the Customer elects not to release the private line service for testing and/or repair.

5. Interruptions caused by the failure of access.

6. An interruption or group of interruptions, resulting from a common cause, for amounts less than one dollar.

C. USE OF ANOTHER MEANS OF COMMUNICATION

If the Customer elects to use another means of communications during the period of interruption, the Customer must pay the charges for the alternative service used.

ADMINISTRATIVELY
APPROVED FOR FILING

2. GENERAL REGULATIONS

ORIGINAL

2.3 PAYMENT ARRANGEMENTS AND CREDIT ALLOWANCE (Cont'd)

2.3.6 ALLOWANCE FOR INTERRUPTIONS (Cont'd)

D. TEMPORARY SURRENDER OF A PRIVATE LINE SERVICE

In certain instances, the Customer may be asked to surrender a private line service for purposes other than maintenance, testing or activity relating to a service order. If the Customer consents, a credit will be given. One day's credit will be given for each 24 hour period or fraction thereof that the service is surrendered.

E. CALCULATION OF CREDIT ALLOWANCES

A credit allowance will be given for private line services that are interrupted for 30 minutes or more. For calculating credit allowances for monthly services, every month is considered to have 30 days. The credit allowance is determined in the following manner:

1. Calculate the Average Point Value by adding the total monthly charges for the private line service. That sum is then divided by the total number of AT&T central offices on the service to obtain the Average Point Value.

2. Calculate the Average Point Value for one full day by dividing the Average Point Value for one month by 30 days: (1) divided by 30,

3. Multiply the Average Point Value for one day by the interruption period to be credited (see Calculation Table, following) in order to determine the credit for one point: (2) x interruption period.

4. Multiply the credit for one point by the number of AT&T central offices affected to determine the credit allowance for the service: (3) x number of AT&T central offices affected.

Example 1: A two-point private line service with two AT&T central offices. Length of interruption = 3 hours.

Total monthly charge	=	$1,200
Average Point Value	=	$\frac{\$1,200}{2}$ = $600
Average Point Value for one full day	=	$ $\frac{600}{30}$ = $20
Amount credited for one point	=	$ 20 x 1/5 = $4.00
Total credit for the number of AT&T central offices affected	=	$ 4.00 x 2 = $8.00

ADMINISTRATIVELY APPROVED FOR FILING

ORIGINAL

2. GENERAL REGULATIONS

2.3 PAYMENT ARRANGEMENTS AND CREDIT ALLOWANCE (Cont'd)

2.3.6 ALLOWANCE FOR INTERRUPTIONS (Cont'd)

E. CALCULATION OF CREDIT ALLOWANCES (Cont'd)

Example 2: A multipoint private line service with six AT&T central offices. Length of interruption = 3 hours. Service to only three AT&T central offices is affected (i.e., service to the remaining three AT&T central offices continued in use).

Total monthly charge = $4,800

Average Point Value = $\frac{\$4,800}{6}$ = $800

Average Point Value for one full day = $\frac{\$\ 800}{30}$ = $26.67

Amount credited for one point = $ 26.67 x 1/5 = $5.34

Total credit for the number of channels affected = $ 5.34 x 3 = $16.02

F. CALCULATION TABLE

The following table is used for calculating credit allowances for interruptions for all private line services other than Accunet® T1.5 Service and ACCUNET® T45 Service. Credit for interruption of ACCUNET® T1.5 Service is shown in 2.3.6.F.3. following. Credit for interruption of ACCUNET® T45 Service is found in Section 12.

1. Interruptions of 24 Hours or Less

Length of Interruption	Credit
Less than 30 minutes	None
30 minutes up to but not including 3 hours	1/10 day
3 hours up to but not including 6 hours	1/5 day
6 hours up to but not including 9 hours	2/5 day
9 hours up to but not including 12 hours	3/5 day
12 hours up to but not including 15 hours	4/5 day
15 hours up to 24 hours inclusive	One day

Two or more interruptions of 30 minutes or more during any period up to but not including 3 hours, shall be considered as an interruption.

2. Interruptions Over 24 Hours

Credit will be allowed in 1/5 day multiples for each 3 hour period of interruption or fraction thereof. No more than one full day's credit will be allowed for any period of 24 hours.

ADMINISTRATIVELY APPROVED FOR FILING

2. GENERAL REGULATIONS

ORIGINAL

2.3 PAYMENT ARRANGEMENTS AND CREDIT ALLOWANCE (Cont'd)

2.3.6 ALLOWANCE FOR INTERRUPTIONS (Cont'd)

F. CALCULATION TABLE (Cont'd)

3. ACCUNET® T1.5 Service

For ACCUNET T1.5 Services' Customers, an interruption allowance in lieu of that specified in 2.3.6.F.1. above will be made for each reported interruption, in accordance with the table below. If more than one interruption is reported on a channel in a given month, each subsequent interruption is considered independently in calculating total credits for that channel on the following month's bill. However, the cumulative credit allowances may not exceed 100 percent, per channel, in a given month. Credit may not be carried over to subsequent months. The Customer's recurring charges for the channel and associated rate elements in the month that the interruption occurs will be the basis for calculation of the credit allowance for that month. Discounts due to pricing plans will be applied prior to the application of credit allowances.

a. Service Assurance Warranty

Length of Interruption	Credit per Interruption
1 minute up to, but not including, 1 hour	5.0%
1 hour up to, but not including, 2 hours	10.0%
2 hours up to, but not including, 3 hours	15.0%
3 hours up to, but not including, 4 hours	20.0%
4 hours up to, but not including, 5 hours	25.0%
5 hours up to, but not including, 6 hours	30.0%
6 hours up to, but not including, 7 hours	35.0%
7 hours up to, but not including, 8 hours	40.0%
8 hours up to, but not including, 9 hours	45.0%
Over 9 hours	50.0%

Example 1: Assume that the total monthly Channel (A) price is $4,500.00 per month.

CHANNEL A	DURATION	CREDIT ALLOWANCE	CREDIT
MONTH 1			
trouble #1	1 hour 15 minutes	10.0%	$450.00
trouble #2	2 hours 59 minutes	15.0%	$675.00
total credit		25.0%	$1,125.00
	Following Month's Bill		$3,375.00

ADMINISTRATIVELY APPROVED FOR FILING

2. GENERAL REGULATIONS

ORIGINAL

2.3 PAYMENT ARRANGEMENTS AND CREDIT ALLOWANCE (Cont'd)

2.3.6 ALLOWANCE FOR INTERRUPTIONS (Cont'd)

F. CALCULATION TABLE (Cont'd)

CHANNEL A	DURATION	CREDIT ALLOWANCE	CREDIT
MONTH 2			
trouble #1	35 minutes	5.0%	$225.00
trouble #2	11 hours 43 minutes	50.0%	$2,250.00
total credit		55.0%	$2,475.00
		Following Month's Bill	$2,025.00
MONTH 3			
trouble #1	20 minutes	5.0%	$225.00
total credit		5.0%	$225.00
		Following Month's Bill	$4,275.00

Example 2: Customer adds an additional Channel (B) during the fourth month which is priced at $3,200.00 per month.

CHANNEL B	DURATION	CREDIT ALLOWANCE	CREDIT
MONTH 4			
trouble #1	1 hour 25 minutes	10.0%	$320.00
trouble #2	2 hours 35 minutes	15.0%	$480.00
total credit		25.0%	$800.00
		Following Month's Bill for Channel B	$2,400.00
CHANNEL A			
trouble #1	1 hour 00 minutes	10.0%	$450.00
	Following Month's Bill for Channel A	$4,500.00 - $450.00 =	$4,050.00
	Total Bill for Channels A & B	$4,050.00 + $2,400.00 =	$6,450.00

ADMINISTRATIVELY APPROVED FOR FILING

2. GENERAL REGULATIONS

ORIGINAL

2.4 USE

2.4.1 GENERAL

A. CUSTOMER USE

A private line service may be used for any purpose consistent with its transmission or switching parameters.

B. LEGAL REQUIREMENTS

The Company shall refuse service to a new applicant and shall disconnect existing service to a Customer, in instances in which the use made or to be made of the service is prohibited by law or in which the service is being or is to be used to violate or to assist in the violation of the law subject to and in accordance with the procedures for refusal or discontinuance of service.

2.4.2 RESALE OR SHARED USE

Any private line service may be resold or shared.

When a private line service is resold or shared, the Customer may advise its User that a portion of its service is provided by AT&T. However, the Customer shall not represent that AT&T jointly participates with the Customer in the provision of its services.

2.4.3 CHANNEL DERIVATION

A. USE

Channel derivation occurs when one or more channels are derived from another channel. When channels are derived through Customer-provided channel derivation equipment, the Customer is responsible for the compatibility of the derived channels. A service which is used to derive channels is furnished subject to the normal transmission, operational and technical parameters of the service. The Company will test and maintain the service for those parameters only.

Unless the Company provides channel derivation service, it does not assure that:

1. Services it provides are suitable for subdivision into additional channels, or

2. derived channels obtained from subdivision are suitable for any communications purpose.

ADMINISTRATIVELY
APPROVED FOR FILING

2. GENERAL REGULATIONS

ORIGINAL

2.4 USE (Cont'd)

2.4.3 CHANNEL DERIVATION (Cont'd)

B. EXCEPTIONS

The Customer may not create additional channels from facilities provided by the Company, except as provided in these schedules.

C. TESTS AND INSPECTION

The Company may, upon suitable notification to the Customer, make such tests and inspections as may be necessary to determine that the requirements in A. preceding, are being complied with in the installation, operation and maintenance of Customer-provided equipment. The Company may interrupt the channel if at any time such action should become necessary in order to protect any of its services because of departure from these requirements.

2.5.4 CONNECTIONS INVOLVING PRIVATE LINE SERVICES

A. FACILITIES PROVIDED BY OTHERS

The channels and equipment shall not be connected either directly or indirectly with channel facilities provided other than by the Company, except as authorized by the Company or set forth in the tariff schedules.

B. COMPANY'S FACILITIES

Except as expressly provided in the tariff schedules, the Company will not permit the Customer or authorized user to use the private line facilities or equipment in connection with central office exchange service lines or message telecommunications service lines of the Company or any other communication utility without the Company's written consent.

C. CUSTOMER-PROVIDED EQUIPMENT

1. Customer-provided equipment or protective circuitry which meets the provisions of the Federal Communications Commission's Registration Program may be connected to a private line service.

2. When Customer equipment, switching equipment or a Customer-provided communications system is connected to a private line service at the Customer's premises the regulations set forth in Exchange Carrier Association Tariff F.C.C. No. 1, paragraph 2.5 (Connections) apply.

   In addition, when a private line service is furnished from an AT&T central office, the connection at the central office must comply with the regulations in the tariff of the service connected at that office.

ADMINISTRATIVELY
APPROVED FOR FILING

2. GENERAL REGULATIONS

ORIGINAL

2.4 USE (Cont'd)

2.4.4 CONNECTIONS INVOLVING PRIVATE LINE SERVICES (Cont'd)

C. CUSTOMER-PROVIDED EQUIPMENT (Cont'd)

3. When a private line service is used with a Customer-provided communications system, or with service(s) provided by others via connections at the Customer's premises, the Customer must make all arrangements concerning the connected system or service with its provider. The connection does not constitute a joint undertaking between AT&T and the provider of the system or service.

2.5 SURCHARGES/TAXES

Insofar as practicable, any sales, use, privilege, excise, franchise or occupation tax, costs of furnishing service without charge or similar taxes or impositions now or hereafter levied by the Federal, State, or Local government or any political subdivision or taxing authority thereof may be billed by the Company to its Customers on a pro rata basis where such taxes, impositions or other charges shall be levied against AT&T.

ADMINISTRATIVELY
APPROVED FOR FILING

ORIGINAL

2. GENERAL REGULATIONS

2.6 DEFINITIONS

The communications services, channels, assemblies and systems outside of AT&T's interoffice network.

ACCESS CONNECTION

A private line service component which connects a local channel, other access or an AT&T Enhanced Service at an AT&T Central Office.

ACCUNET® RESERVED DIGITAL SERVICE

ACCUNET® RESERVED DIGITAL SERVICE (ARDS) is furnished for the transmission of digital signals at 384 kbps, 768 kbps and 1.5 Mbps.

ASSEMBLY

An "Assembly" is a configuration consisting of Customer premises equipment and/or a communications system which is connected to a service.

AT&T CENTRAL OFFICE

The physical point of access for a service category to the AT&T interoffice network. Criteria for establishing AT&T central offices and a list of AT&T central offices with services provided are in the AT&T Business Services Guides.

ATTENUATION DISTORTION

"Attenuation Distortion" is the difference in the amount of power lost at certain frequencies on a circuit compared to a frequency of 1000 Hz.

AUTHORIZED USER

A person, firm or corporation who is authorized by the Customer or joint user to be connected to the service of the Customer. An authorized user must be specifically named in the application for private line service and a station of the private line service must be located on the authorized user's premises.

BAUD

"Baud" is a unit of signaling speed. It is the reciprocal of the time duration in seconds of the shortest signal element (mark or space) within a code signal. The speed in bauds is the number of signal elements per second.

ADMINISTRATIVELY
APPROVED FOR FILING

2. GENERAL REGULATIONS

ORIGINAL

2.6 DEFINITIONS (Cont'd)

BIT

"Bit" is the smallest unit of information in the binary system of notation.

BRIDGING

"Bridging" indicates equipment and/or services used to connect a channel between (1) an AT&T central office bridge and a Customer's premises or (2) a Local Exchange Company Central Office bridge and a Customer's premises.

BUILDING

A "Building" is a structure consisting of an enclosed area surrounded by outside walls and under one continuous roof.

CENTRAL OFFICE

A "central office" is an AT&T or Local Exchange Company location from which it furnishes telecommunications services.

CHANNEL

A "Channel" is a path (or paths) for communication, between two or more stations or Company offices, furnished in such manner as the Company may elect.

CHANNEL OPTION

A private line service component added to an Interoffice Channel to change and/or augment its transmission characteristics.

COMMUNICATIONS SYSTEMS

A "Communications System" is the dedicated private line channel service and equipment (e.g. microwave, analog or digital cable system) furnished by a Customer or an Other Common Carrier for communications between premises.

COMPANY

The "Company" is AT&T Communications of The Mountain States, Inc.

COMPONENT

An element furnished under this Tariff. Components are the channel(s), office connections, station connections, channel options, and office functions.

ADMINISTRATIVELY
APPROVED FOR FILING

2. GENERAL REGULATIONS

ORIGINAL

2.6 DEFINITIONS (Cont'd)

CONNECTING ARRANGEMENT

A "Connecting Arrangement" is the equipment provided by the Company to accomplish the direct electrical connection of non-Company provided facilities with facilities of the Company or the direct electrical connection of Company facilities.

CONTRACT

A "Contract" refers to the service agreement between a Customer and the Company under which facilities for communication between specified locations, for designated periods and for the use of the Customer and the authorized users specifically named in the contract are furnished in accordance with the provisions of the Company's tariff schedule regulations.

CUSTOMER

A "Customer" is a person or legal entity that is responsible for ordering a private line, paying all charges and complying with all tariff regulations.

CUSTOMER'S PREMISES

A "Customer's Premises" is a location where a service is terminated. It includes the premises of the Customer, Authorized User or another communications utility.

CUSTOMER PREMISES EQUIPMENT

"Customer Premises Equipment" is terminal equipment, a multiline terminating system or protective circuitry located at the Customer's premises.

CUSTOMER-PROVIDED TEST EQUIPMENT

"Customer-Provided Test Equipment" is non-Company test equipment which is located at the Customer's premises and used for the detection and/or isolation of a communications service fault.

DEMARCATION POINT

The electrical terminus of a channel service on a Customer's premises. It provides a physical interface to the private line service in terms of design, installation and testing.

DIRECT ELECTRICAL CONNECTION

A physical connection of the electrical conductors in the communications path.

ADMINISTRATIVELY
APPROVED FOR FILING

ORIGINAL

2. GENERAL REGULATIONS

2.6 DEFINITIONS (Cont'd)

DUE DATE

The date that has been established for completion of the installation, change or disconnect of a private line service component.

DUPLEX SERVICE

"Duplex" is the simultaneous transmission of communications in both directions.

ENCODED ANALOG CONTENT

An analog signal which has been coded and multiplexed within a digital signal.

EQUIVALENT ANALOG SIGNAL POWER

The power of the analog signal at the output of a zero level decoder, obtained when a digital signal is the input to the decoder. A zero level decoder yields an analog level of 0 dBm at its output when the input is a digitally encoded milliwatt signal.

EXCHANGE

An "Exchange" is a unit established by the Local Exchange Company for the administration of communications service in a specified area which usually embraces a city, town or village and its environs. It consists of one or more central offices together with the associated plant used in furnishing communications service within that area.

EXCHANGE AREA

An "Exchange Area" is the territory served by an exchange.

FUNCTION CONNECTION

A private line service component which connects, at an AT&T Central Office, an office function to channels and other AT&T Services, an IOC to other AT&T Services and an AT&T Service to other AT&T Services.

INTEROFFICE CHANNEL

A private line service component which connects an AT&T central office to another AT&T central office.

ADMINISTRATIVELY
APPROVED FOR FILING

2. GENERAL REGULATIONS

ORIGINAL

2.6 DEFINITIONS (Cont'd)

INTERFACE

The electrical and physical means by which a connection is made at the demarcation point.

ISOCHRONOUS

Timing that is derived from the signal carrying the data (i.e., no timing or clock lead is provided at the interface on the Customer's premises).

LOCAL ACCESS AND TRANSPORT AREA (LATA)

A geographic area established for the provision and administration of communications service.It encompasses one or more designated exchanges which are grouped to serve common social, economic and other purposes.

LOCAL CHANNEL

A private line channel furnished under Private Line Local Channel Services Tariff 11 that connects an AT&T central office to a Customer's premises or connects two Customer's premises.

LOCAL EXCHANGE COMPANY

The "Local Exchange Company" is the local telephone Company not affiliated with AT&T that provides telephone exchange services.

MULTIFREQUENCY PULSING

An inband interoffice address signaling method in which ten decimal digits and five auxiliary signals are each represented by selecting two frequencies out of a group consisting of: 700, 900, 1100, 1300, 1500, and 1700 Hz.

MULTILINE TERMINATING SYSTEM

A "Multiline Terminating System" is Customer premises switching equipment (e.g., Private Branch Exchange, Centrex, Automatic Call Distributor, tandem switching equipment) and key telephone type systems which are capable of terminating more than one local central office line, WATS access line, circuit or communications system.

MULTIPOINT

A private line service directly connecting three or more AT&T central offices.

ADMINISTRATIVELY
APPROVED FOR FILING

2. GENERAL REGULATIONS

ORIGINAL

2.6 DEFINITIONS (Cont'd)

MULTIPOINT BRIDGING

"Multipoint Bridging" indicates equipment and/or services used to interconnect several local loops or channels on Multipoint voice and/or data channels.

NETWORK INTERFACE

The point of demarcation on the end user's premises at which the access supplier's responsibility for the provision of access ends.

NONRECURRING CHARGES

Nonrecurring charges are one time charges that apply for a specific work activity (i.e., installation or change to an existing service).

OFFICE FUNCTION

A private line service component located and furnished at an AT&T central office to perform channel derivation, switching, conversion, transfer or conferencing functions.

POINT OF INTERFACE

The point of demarcation between AT&T and an access supplier. This point, located at an AT&T central office, establishes the technical interface, the test point, and the point of division of operational responsibility.

PREMISES

A "Premises" is a building or buildings on continuous property (except railroad right-of-way, etc.) not separated by a public highway.

PRIVATE BRANCH EXCHANGE

A "Private Branch Exchange" is an arrangement of switching equipment and stations at a premises for (1) intercommunicating among the stations and (2) connection to exchange, MTS and other services or communications systems.

PRIVATE LINE NETWORK

A "Private Line Network" consists of two or more private lines of the same type contracted for by one Customer and reaching one or more common service points. The lines may be operated separately or they may be connected or connectable by means of a switching arrangement.

ADMINISTRATIVELY
APPROVED FOR FILING

2. GENERAL REGULATIONS

ORIGINAL

2.6 DEFINITIONS (Cont'd)

PRIVATE LINE SERVICE

The Interoffice Channel(s) and office connection(s), station connections and channel option(s) furnished under this tariff to a Customer as a unit uninterrupted by an office function.

RATE CENTER

A "Rate Center" is a specified geographical location for which mileage measurements are determined for the application of channel mileage rates.

RATE CENTER AREA

A "Rate Center Area" is the area which encompasses the territories served by the central offices (NXXs) that are assigned to a rate center.

RINGING

An alternating or pulsating current intended to produce an audible or visible alerting signal.

SERVICE DATE

The date that billing starts for a private line service or component.

SERVICE PERIOD

The period of time during which AT&T furnishes a private line service. It encompasses the consecutive period from the start of service to the end of service ordered by the Customer.

SINGLE SERVICE

"Single Service" is the transmission of communications in one direction or alternately in either direction. It includes bidirectional non-simultaneous transmission of tones required solely for control purposes or quick turnaround or synchronization.

ADMINISTRATIVELY
APPROVED FOR FILING

2. GENERAL REGULATIONS

ORIGINAL

2.6 DEFINITIONS (Cont'd)

START OF INSTALLATION

An installation of service, channels and equipment or a move, change or rearrangement, applied for by an applicant or Customer, is considered to have started when the Company incurs any expense in connection therewith, or in preparation thereof, which would not otherwise have been incurred, provided:

- The applicant or Customer has advised the Company to proceed with the installation, and
- the Company has advised the applicant or Customer that, in accordance with their order, it is commencing the installation.

TERMINAL EQUIPMENT

"Terminal Equipment" is any telecommunications equipment other than a multiline terminating system or communications systems installed on the Customer side of the demarcation point at a premises.

USER

A person or legal entity authorized by a Customer to communicate over, or be connected to, the Customer's private line service.

ADMINISTRATIVELY
APPROVED FOR FILING

ORIGINAL

3. GENERAL DESCRIPTION

3.1 GENERAL

This section provides a general overview of the private line services available in this tariff. It includes a description of each category of service. More detailed descriptions and specific rate information are located within the section of this tariff that applies to a given type of service.

3.2 PRIVATE LINE SERVICE CATEGORIES

There are several categories of private line service. Each service category has its own technical characteristics and specifications, and most are further subdivided into speed or type of transmission. Following is a brief description of each service category. AT&T central offices for specific categories are enumerated in the AT&T Business Services Guides.

3.2.1 ACCUNET® T1.5 SERVICE

Provides services for the transmission of large volumes of communications at 1.544 Mbps.

3.2.2 (RESERVED FOR FUTURE USE)

3.2.3 (RESERVED FOR FUTURE USE)

3.2.4 ACCUNET® SPECTRUM OF DIGITAL SERVICES

Provides services for the simultaneous two-way transmission of data at synchronous speeds of either 56 or 64 kbps, or a combination of 64 kbps signals to achieve speeds of 128 kbps, 256 kbps, 384 kbps, 512 kbps or 768 kbps.

3.3 SERVICE COMPONENTS

A private line service connects two or more AT&T central offices. A private line service may also consist solely of an office function.

3.3.1 INTEROFFICE CHANNEL

An IOC is a channel between two AT&T central offices. An IOC may be provided between LATAs or within a LATA.

ADMINISTRATIVELY
APPROVED FOR FILING

3. GENERAL DESCRIPTION

ORIGINAL

3.3 SERVICE COMPONENTS (Cont'd)

3.3.2 CENTRAL OFFICE CONNECTION

A central office connection provides the physical interconnection, at the same AT&T central office, between an IOC, an office function(s), a Local Channel(s) obtained from Private Line Local Channel Services Schedule 11 or other access. One central office connection applies for each combination of two of the above elements connected.

Examples of the types of connections are:

- An IOC to: A Local Channel or other access, or an office function.
- A Local Channel to: Another Local Channel or other access, or an office function.
- An office function to: Another office function.
- Other access to: An office function.

When access is connected to an AT&T service and the Customer wishes AT&T to perform the functions of access design, ordering, installation, coordination, pre-service testing and service turn-up, trouble sectionalization and restoration coordination, the Access Coordination Function, furnished under Schedule 11, provides those functions. When the Access Coordination Function is ordered, AT&T will design the service based upon standard engineering considerations that may not produce a minimum price configuration.

When other access is connected to an AT&T service and the Customer wishes AT&T to perform only the function of physical connection of the other access to a service component at an AT&T central office, a central office connection only is employed. In such cases AT&T makes or implies no warranty that the assembly will operate properly or that transmission will be satisfactory.

ADMINISTRATIVELY
APPROVED FOR FILING

ORIGINAL

3. GENERAL DESCRIPTION

3.3 SERVICE COMPONENTS (Cont'd)

3.3.3 CHANNEL OPTIONS

Channel options are features which can be added to an Interoffice Channel to change or to augment its transmission characteristics. Typical channel options are signaling and data conditioning.

3.3.4 OFFICE FUNCTIONS

Office functions are optional functions performed at AT&T central offices which enable a Customer to increase the efficiency of usefulness of its service. Office functions are connected with channels or other office functions by central office connections.

ADMINISTRATIVELY
APPROVED FOR FILING

ORIGINAL

4. INTEROFFICE CHANNEL MILEAGE MEASUREMENT

4.1 GENERAL

The rate mileage for an Interoffice Channel, except as noted herein, is the airline distance measured between two AT&T central offices.

To determine the rate mileage for an Interoffice Channel, first determine the appropriate AT&T central office as described below.

4.1.1 DETERMINING AT&T CENTRAL OFFICES

The appropriate AT&T central office used to price a private line service is determined by (1) the LATA(s) in which the private line service is desired, (2) the category of private line service to be provided, and (3) the designated AT&T central offices when certain office functions are involved.

A. DETERMINING THE AT&T CENTRAL OFFICES WITHIN A LATA

The Customer may specify a particular AT&T central office within a LATA (i.e., Customer specified routing). In such cases, the interoffice Channel will be physically routed and priced to the AT&T central office specified by the Customer. If the Customer does not make such a specification, AT&T will determine the AT&T central office(s) for a LATA, using the telephone number which normally serves the Customer's premises and the type of service to be provided as follows:

1. In the AT&T Business Services Guides, look up the area code and first three digits of the telephone number and find its rate center listing.

2. In the AT&T Business Services Guides, look up the rate center and find its LATA number.

3. In the AT&T Business Services Guides, look up the LATA number and find the AT&T central offices within the LATA. Determine the AT&T central offices within the LATA which provide the service category required and the V&H coordinates for those AT&T central offices.

4. The AT&T central offices used to determine the mileage for an IOC will be the one which is nearest to the Customer's premises, determined as set forth in the AT&T Business Services Guides. If there is only one AT&T central office in a LATA for a category of private line service, no choice is necessary.

5. Once all of the appropriate AT&T central offices have been determined, calculate the air line distance between the AT&T central offices (see Calculation of Airline Mileage, Section 4.1.2 following). The result will be the IOC rate mileage(s).

ADMINISTRATIVELY
APPROVED FOR FILING

ORIGINAL

4. INTEROFFICE CHANNEL MILEAGE MEASUREMENT

4.1 GENERAL (Cont'd)

4.1.1 DETERMINING AT&T CENTRAL OFFICES (Cont'd)

B. DESIGNATED AT&T CENTRAL OFFICES

AT&T central offices for certain office functions are designated in AT&T Business Services Guides.

4.1.2 CALCULATION OF AIRLINE MILEAGE

Airline mileage between V&H coordinates is calculated as set forth in the AT&T Business Services Guides. Following is an example of how mileage is calculated in accordance with those regulations.

After determining the V&H coordinates of the AT&T central offices on a private line service as described in 4.1.1 preceding, calculate the mileage between the V&H coordinates as follows:

A. EXAMPLE:

Phoenix, AZ (PHNXAZMA) (V) 09133 (H) 06748
Tucson, AZ (TCSNAZMA) (V) 09436 (H) 06487

1. Obtain the difference between the V coordinates. Then obtain the difference between the H coordinates. (The difference is always obtained by subtracting the smaller coordinate from the larger).

	V	H
	09346	06748
	- 09133	- 06487
Difference	213	261

ADMINISTRATIVELY APPROVED FOR [illegible]

4. INTEROFFICE CHANNEL MILEAGE MEASUREMENT

ORIGINAL

4.1 GENERAL (Cont'd)

4.1.2 CALCULATION OF AIRLINE MILEAGE (Cont'd)

A. EXAMPLE: (Cont'd)

2. Square each difference

$(213)^2 = 45,369$

$(261)^2 = 68,121$

3. Add the squares of the two differences.

45,369 + 68,121 = 113,490

4. Divide the sum of the squares by 10. (Round any fraction obtained to the next higher whole number).

113,490 / 10 = 11,349.0 Rounded = 11,349

5. Take the square root of the result obtained in 4. The resultant is the airline miles of the IOC. (Fractional miles are rounded to the next higher whole number.)

Square root of 11,349 is 106.53168
IOC airline mileage (Rounded) = 107 miles

ADMINISTRATIVELY
APPROVED FOR FILING

ORIGINAL

4. INTEROFFICE CHANNEL MILEAGE MEASUREMENT

4.2 TWO-POINT MILEAGE MEASUREMENT

The rate mileage for the IOC on a two-point private line service is the airline distance measured between two AT&T central offices.

4.3 MULTIPOINT MILEAGE MEASUREMENT

The rate mileage for the IOC(s) on a private line service with three or more AT&T central offices is the sum of the individual airline mileages measured between each pair of AT&T central offices which produces the lowest mileage charge when all of the AT&T central offices are connected together.

Example:

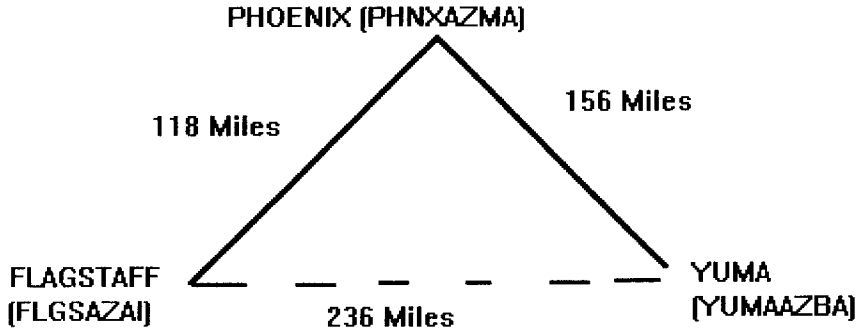

The combination of mileages FLAGSTAFF to PHOENIX and PHOENIX to YUMA produces the lowest total mileage charge. Therefore, the private line service would be priced in that manner. The charge for the airline mileage between each pair of AT&T central offices is calculated separately and then summed. The actual routing of the private line service may vary from the priced configuration.

Exceptions to this method of measurement may apply in those cases when the Customer specifies the sequence in which the IOCs are connected (see Exceptions to Interoffice Channel Mileage Measurements, Section 4.4 following).

4.4 EXCEPTIONS TO INTEROFFICE CHANNEL MILEAGE MEASUREMENTS

In certain cases there are exceptions to the way IOC mileage measurements are determined. This section describes those exceptions.

ADMINISTRATIVELY
APPROVED FOR FILING

ORIGINAL

4. INTEROFFICE CHANNEL MILEAGE MEASUREMENT

4.4 EXCEPTIONS TO INTEROFFICE CHANNEL MILEAGE MEASUREMENTS (Cont'd)

4.4.1 CUSTOMER SPECIFIES THE IOC ROUTING OF A MULTIPOINT SERVICE

This exception applies to multipoint services where the AT&T central offices are connected together in the sequence specified by the Customer.

The total rate mileage is the combination of individual two-point airline distances measured between the AT&T central offices based on the sequence requested by the Customer.

The service would be physically routed in the sequence requested by the Customer and would be priced according to that routing.

Example: A Customer specified a YUMA - PHOENIX - FLAGSTAFF multipoint service be routed PHOENIX to YUMA and YUMA to FLAGSTAFF:

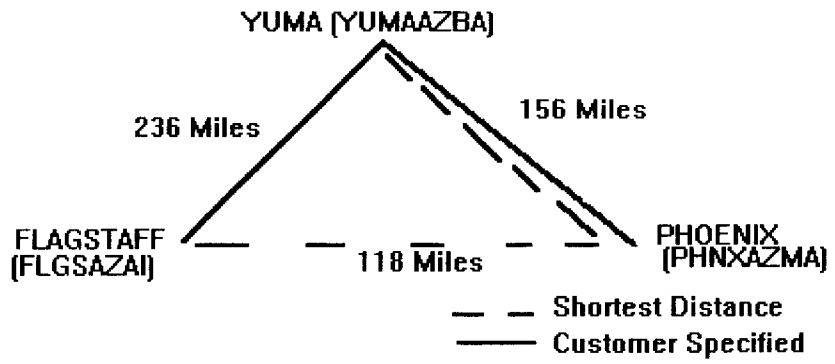

The service would be physically routed in the sequence requested by the Customer and would be priced according to that routing.

ADMINISTRATIVELY
APPROVED FOR FILING

5. RESERVED FOR FUTURE USE

ORIGINAL

ADMINISTRATIVELY
APPROVED FOR FILING

6. RESERVED FOR FUTURE USE

ORIGINAL

ADMINISTRATIVELY
APPROVED FOR FILING

ORIGINAL

ADMINISTRATIVELY
APPROVED FOR FILING

ORIGINAL

7. ACCUNET® T1.5 SERVICE-INTEROFFICE

7.1 GENERAL

An ACCUNET T1.5 Service provides for the transmission of 1.544 Mbps digital signals over terrestrial channels.

An ACCUNET T1.5 Service uses one of two types of DS1 signal formats. They are:

- A framed DS1 signal format (D4 or ESF), and
- An unframed DS1 signal format for U.S. Government Agencies only.

Customers (except U.S. Government Agencies and others furnishing service to U.S. Government Agencies) are required to select either D4 format or where available, the Extended Superframe (ESF). The D4 format is described in Technical Publication-PUB 62411 and ESF is described in Technical Publication-PUB 54016, (see Technical Publication Information in Preface). U.S. Government Agencies may obtain ACCUNET T1.5 Services free from any format constraint by notifying AT&T of such an election at the time service is ordered.

7.1.1 DESCRIPTION

ACCUNET T1.5 Services are configured by furnishing office functions or by combining components to connect customer locations within the State of Arizona. ACCUNET T1.5 Services are furnished on a two-point basis only. ACC Business, a non-AT&T branded division, is introducing intrastate private line products. All terms and conditions, rates and charges are identical to the existing AT&T ACCUNET T1.5 Services offered in this tariff.

7.1.2 SIGNALS AT THE CENTRAL OFFICE CONNECTION

All signals generated by Local Channels or other access and presented to the Central Office connection at an AT&T Central Office must meet certain signal and format constraints. Some of these constraints are listed below. Additional details are set forth in Sections 5 through 8 of Technical Publication-PUB 62411 (see Technical Publication Information in Preface).

A. SIGNAL AND FORMAT CONSTRAINTS FOR FRAMED AND UNFRAMED DS1 SIGNALS

- Data Rate: 1.544 Mbps +/- 75 bps.
- Consecutive Zeros: No more than 15 consecutive zeros may be generated.

B. FORMAT CONSTRAINT FOR FRAMED DS1 SIGNAL

- F Bit Position: This framing constraint requires the use of every 193rd bit position for framing, error detection, signaling and the transmission of other network control information.

ADMINISTRATIVELY
APPROVED FOR FILING

7. ACCUNET® T1.5 SERVICE-INTEROFFICE

7.1 GENERAL (Cont'd)

7.1.3 REGULATIONS

In addition to the Regulations in Section 2 preceding, the following apply.

A. AVAILABILITY OF AN ACCUNET T1.5 SERVICE

ACCUNET T1.5 Services are available from the AT&T Central Offices listed in the AT&T Business Services Guides.

B. CREDIT ALLOWANCES FOR INTERRUPTIONS

For purposes of determining credit allowances in accordance with the regulations in 2.4.6 preceding, an ACCUNET T1.5 Service is considered to be interrupted when:

- There has been a loss of continuity, or
- 300 or more seconds of transmission containing errors occur in a 15 minute period.

C. CONNECTION OF OTHER ACCESS

Other access may be connected to an ACCUNET T1.5 Service. If the connection provides the capability to transmit signals with encoded analog content via the Accunet T1.5 Service to the telecommunications network, it must comply with the minimum protection criteria specified for a Voice Grade Service.

7.1.4 MINIMUM PAYMENT PERIOD

Unless otherwise specified, the minimum payment period for all ACCUNET T1.5 Service components is one month.

7.1.5 NOTICE OF DISCONTINUANCE

The Notice of Discontinuance for ACCUNET T1.5 Service is thirty days. Recurring charges apply for a period of thirty days from the date AT&T receives the discontinuance notice or until the requested discontinuance date, whichever is longer. The charges will continue to apply whether or not the customer continues to use the service.

7.1.6 CANCELLATION CHARGE

As specified in Section 2.4.4 preceding, a cancellation charge will apply, per component, for service orders canceled by the Customer on or after the SID.

ADMINISTRATIVELY
APPROVED FOR FILING

ORIGINAL

7. ACCUNET® T1.5 SERVICE-INTEROFFICE

7.1 GENERAL (Cont'd)

7.1.6 CANCELLATION CHARGE (Cont'd)

Maximum Cancellation Charge Schedule[1]

CRITICAL DATES

COMPONENT	USOC	APP	SID	DLRD	RID	WOT	CTA	DD
INTEROFFICE CHANNEL (IOC)	NRZCN	$0	$80.83	$91.61	$123.93	$290.99	$538.82	$538.82
OFFICE CONNECTION (COC)	NRZCN	$0	$51.15	$57.97	$78.42	$184.14	$341.00	$341.00

The applicable charge is based on the last scheduled critical date reached in the service order process. For example, for an order involving an IOC and two office connections which is canceled after the SID but prior to the DLRD, a total charge of $171.58 will apply, consisting of $49.05 for each of the two office connections and $73.48 for the IOC.

7.1.7 FIXED DISCOUNT RATE PLAN

A fixed discount rate plan is available as an alternative to monthly rates for the IOC component of ACCUNET T1.5 Service. One, two, three, four and five year fixed discount rate plans are available. In exchange for a time commitment to an IOC the customer is given a percentage discount on the monthly rate. Under the fixed discount rate plan, the percentage discount will remain fixed throughout the commitment period. If the rates under the monthly rate change during the commitment period, the discount will be taken off the lower rate.

The fixed discount rate plans for IOCs are available when ordered with a due date no later than December 31, 1991.

A. DISCONTINUANCE OF A FIXED DISCOUNT RATE PLAN-WITHOUT LIABILITY

The Customer may discontinue a fixed discount rate plan prior to the expiration of the applicable term without liability as specified following.

ADMINISTRATIVELY
APPROVED FOR FILING

NOTE 1: See Price List for current rates.

7. ACCUNET® T1.5 SERVICE-INTEROFFICE

7.1 GENERAL (Cont'd)

7.1.7 FIXED DISCOUNT RATE PLAN (Cont'd)

A. DISCONTINUANCE OF A FIXED DISCOUNT RATE PLAN-WITHOUT LIABILITY (Cont'd)

1. The Customer may discontinue an ACCUNET T1.5 IOC furnished under a fixed discount rate plan prior to the expiration of the applicable term without liability under any of the following conditions:

(a) If tariff revisions decrease the applicable fixed discount rate before the applicable term expires, without the Customer's prior written consent.

(b) If the Customer enters a new agreement before the applicable term expires and the expiration date of the new plan is on or after the expiration date of the unexpired plan.

2. In addition, the Customer may discontinue an ACCUNET T1.5 IOC furnished under a fixed discount rate plan prior to the expiration of the applicable term without liability under the following conditions:

(a) If the Customer elects to subscribe to an AT&T digital service between the same points as the ACCUNET T1.5 Service at a higher transmission speed (e.g. ACCUNET T45 Service) under a new fixed discount rate plan. The expiration of the new plan must be on or after the expiration date of the unexpired plan.

ADMINISTRATIVELY
APPROVED FOR FILING

ORIGINAL

7. ACCUNET® T1.5 SERVICE-INTEROFFICE

7.1 GENERAL (Cont'd)

7.1.7 FIXED DISCOUNT RATE PLANS (Cont'd)

B. DISCONTINUANCE OF A FIXED DISCOUNT RATE PLAN-WITH LIABILITY

Discontinuance of a service furnished under a fixed discount rate plan for reasons other than stated in Section 7.1.7.A, preceding, prior to the expiration of the applicable term, will result in Customer liability as specified following:

1. For service discontinued prior to the completion of the first year of service, the Customer is liable for 100 percent of the total monthly charges for the unexpired portion of the first year of service plus 50 percent of the total monthly charges for the remaining portion of the applicable term.

2. For service discontinued after the completion of the first year of service and more than one month prior to the expiration date of the fixed discount rate plan, the Customer is liable for 50 percent of the total monthly charges for the unexpired portion of the applicable term. For service discontinued within one month of the expiration date of the fixed discount rate plan, Notice of Discontinuance provisions as specified in Section 7.1.5, preceding apply.

   Payment of the total amounts owed by the Customer under this regulation are due within thirty days of the date service is discontinued.

C. EXPIRATION AND RENEWAL OF A FIXED DISCOUNT RATE PLAN

Upon expiration of a fixed discount rate plan, the Customer has the option to obtain the same service under a new fixed discount rate plan if available, or to obtain service under the monthly rate plan.

The Customer may renew service under a new fixed discount rate plan by notifying AT&T, in writing, anytime prior to the expiration of the current fixed discount rate plan.

To continue the same service under monthly rates, no action is required on the part of the Customer. In this case, the Customer will be considered to have satisfied the one-month minimum period.

Notice of Discontinuance provisions, as specified in Section 7.1.5 preceding, apply if the Customer elects not to renew service.

ADMINISTRATIVELY
APPROVED FOR FILING

ORIGINAL

7. ACCUNET® T1.5 SERVICE-INTEROFFICE

7.2 SERVICE COMPONENTS

The components of an ACCUNET T1.5 Service are:

7.2.1 INTEROFFICE CHANNEL (IOC)

An Interoffice Channel is a channel between two AT&T Central Offices, points of connection or a combination thereof.

A. RATES

The rates for Accunet T1.5 service are established on an individual customer requirement.

The cost and rate levels are developed on a case by case basis and will not be priced below direct marginal costs. Proposed rates for new customers and changes to rates for existing customers and cost support information will be submitted to the Utilities Division for approval at least 14 days prior to the proposed effective date.

USOC	MONTHLY CHARGES PER CHANNEL
1LNVX	ICB

ADMINISTRATIVELY
APPROVED FOR FILING

ORIGINAL

7. ACCUNET® T1.5 SERVICE-INTEROFFICE

7.2 SERVICE COMPONENTS (Cont'd)

7.2.2 OFFICE CONNECTION

A. ACCESS CONNECTION

An access connection provides the function, at an AT&T Central Office, of connecting Local Channels obtained from Tariff 11 or other access to an IOC, office function, another Local Channel or other access. One access connection applies for each Local Channel or other access.

USOC	MONTHLY RATE	NONRECURRING CHARGE
041AC	ICB	ICB

B. FUNCTION CONNECTION

A function connection provides the function, at an AT&T Central Office, of connecting an office function to an IOC or another office function.

USOC	MONTHLY RATE	NONRECURRING CHARGE
NRZFC	N/A	ICB

7.2.3 CHANNEL OPTIONS

Channel options are features added to a channel to change or augment its transmission characteristics.

A. SPECIAL CONDITIONING

This option equips an ACCUNET T1.5 Service with the necessary arrangements to meet technical parameters for special Customer requirements. These arrangements are designed on an individual case basis. The technical parameters, locations involved and charges will be developed on an individual case basis.

B. FIBER-ONLY ROUTING

This option will provide for fiber-only routing of ACCUNET T1.5 IOCs. Customers requesting fiber-only routing will be advised prior to AT&T's issuance of an order for service whether or not it is available. If such routing is not available, the Customer may cancel the request for service without penalty.

	USOC	NONRECURRING CHARGE
- per IOC	DY7FT	ICB

ADMINISTRATIVELY
APPROVED FOR FILING

7. ACCUNET® T1.5 SERVICE-INTEROFFICE

7.2 SERVICE COMPONENTS (Cont'd)

7.2.3 CHANNEL OPTIONS (Cont'd)

C. CLEAR CHANNEL CAPABILITY

This option provides a Customer with the capability to transmit DSO (64 kbps) or DS1 (1.544 Mbps) signals with more than 15 consecutive zeros in a transmission. B8ZS (bipolar eight zero substitution) is the only coding technique acceptable for use with ACCUNET T1.5 Service to provide 64 kbps clear channel capability. B8ZS coding is described in Technical Publication-PUB 62411.

Compatible Customer Premises equipment is required with this option. This equipment must be capable of transmitting and receiving B8ZS coding and must conform to extended superframe format. Extended superframe format is described in Technical Publication-PUB 54016.

An order for the Clear Channel Capability option must be placed coincidently with the Customer's order for an ACCUNET T1.5 IOC, though this option may not be available at all AT&T Central Offices. There is no charge for this option.

D. ENHANCED DIVERSITY ROUTING

Under this option, two or more ACCUNET T1.5 IOCs are furnished entirely over physically and electrically separated transmission paths, such that a failure at one geographic location will not cause the loss of both paths.

The Enhanced Diversity Routing (EDR) is offered where separate facilities are available, subject to routing or performance constraints resulting from the diverse routing and made known to the Customer prior to ordering. If complete EDR is not available when ordered, or if it becomes unavailable at a later date due to network rearrangements, EDR may be furnished on a partial basis only at the Customer's request. The Customer will be advised before partial EDR is provided and may cancel or disontinue the EDR option if the partial is provided and may cancel or discontinue the EDR option if the partial EDR is not acceptable. No cancellation charge will apply if the facilities are not available or the Customer does not accept the partial EDR. When EDR is ordered, an installation charge and a monthly charge apply for each IOC in and IOC relationship pair on which EDR is provided, i.e., IOC No. 1 is diverse from IOC No. 2.

ADMINISTRATIVELY
APPROVED FOR FILING

ORIGINAL

7. ACCUNET® T1.5 SERVICE-INTEROFFICE

7.2 SERVICE COMPONENTS (Cont'd)

7.2.3 CHANNEL OPTION (Cont'd)

D. ENHANCED DIVERSITY ROUTING (Cont'd)

Example 1: The Customer has four IOC's and specifies that IOC No. 1 and IOC No. 2 be diversely routed. The relationship pair is 1&2. Two EDR monthly and installation charges apply, one for each IOC in the relationship pair. EDR charges will not apply to IOC Nos. 3 and 4.

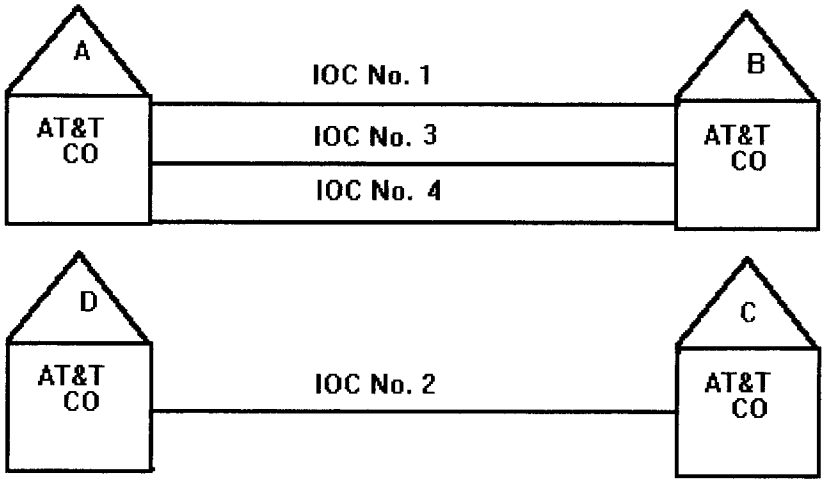

ADMINISTRATIVELY
APPROVED FOR FILING

ORIGINAL

7. ACCUNET® T1.5 SERVICE-INTEROFFICE

7.2 SERVICE COMPONENTS (Cont'd)

7.2.3 CHANNEL OPTION (Cont'd)

D. ENHANCED DIVERSITY ROUTING (Cont'd)

Example 2: The Customer has four IOCs and specifies that IOC Nos. 1 and 2 be diversely routed from IOC Nos. 3 and 4. The IOC relationship pairs are 1&3, 2&4, 1&4, 2&3. Eight EDR monthly and installation charges apply, one for each IOC in the relationship pair.

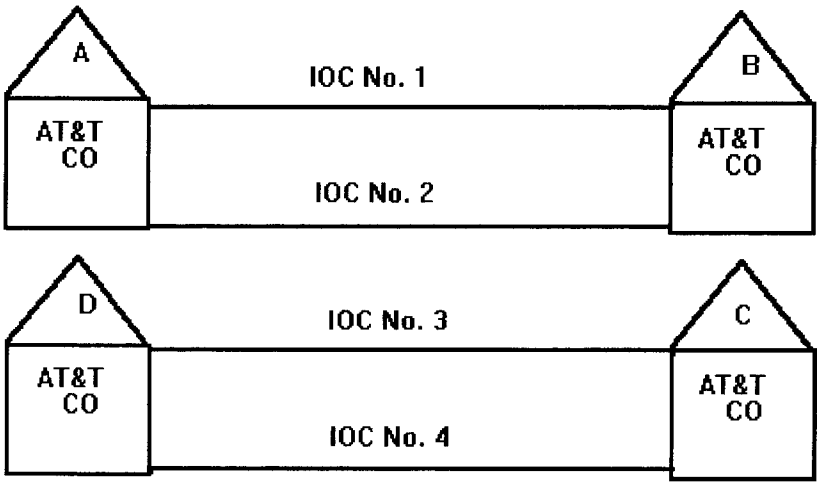

ADMINISTRATIVELY
APPROVED FOR FILING

7. ACCUNET® T1.5 SERVICE-INTEROFFICE

ORIGINAL

7.2 SERVICE COMPONENTS (Cont'd)

7.2.3 CHANNEL OPTION (Cont'd)

D. ENHANCED DIVERSITY ROUTING (Cont'd)

Example 3: The Customer has three IOCs and specifies that each of the IOCs be diversely routed. The IOC relationship pairs are 1&2, 1&3, 2&3. Six EDR monthly and installation charges apply, one for each IOC in the relationship pair.

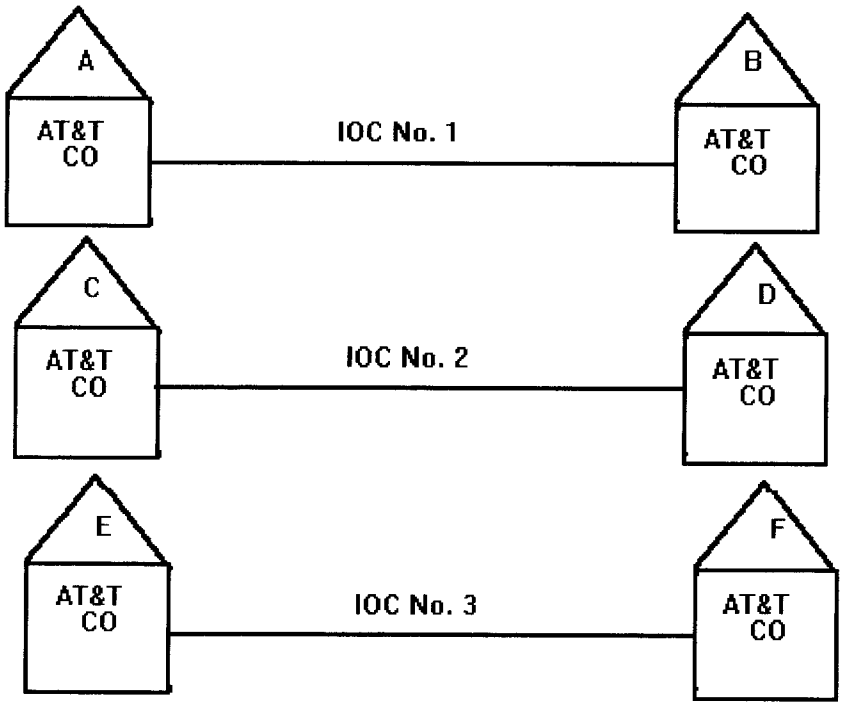

ADMINISTRATIVELY
APPROVED FOR FILING

7. ACCUNET® T1.5 SERVICE-INTEROFFICE

ORIGINAL

7.2 SERVICE COMPONENTS (Cont'

7.2.3 CHANNEL OPTION (Cont'd)

D. ENHANCED DIVERSITY ROUTING (Cont'd)

Example 4: The Customer has two IOCs and specifies that IOC No. 1 be diversely routed from IOC No. 2. Central Office B is the only T1.5 POP in the LATA: Customer requests partial enhanced diversity routing. The IOC relationship pair is 1&2. Two EDR monthly and installation charges apply, one for each IOC in the relationship pair.

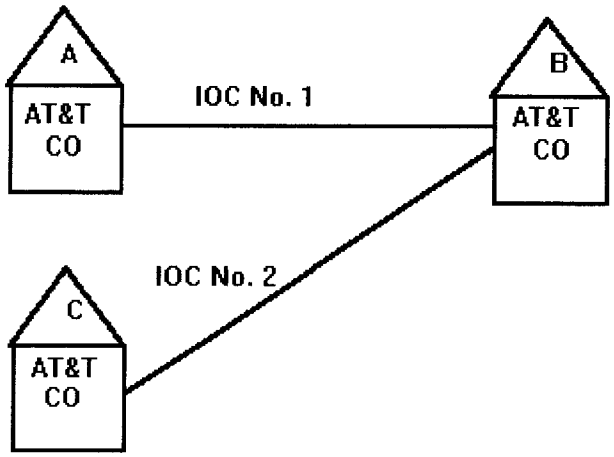

	USOC	MONTHLY RATE	NONRECURRING CHARGE
- per each IOC relationship pair	DY7D1	ICB	ICB

ADMINISTRATIVELY
APPROVED FOR FILING

7. ACCUNET® T1.5 SERVICE-INTEROFFICE

ORIGINAL

7.2 SERVICE COMPONENTS (Cont'

7.2.4 OFFICE FUNCTIONS

A. TRANSFER ARRANGEMENT

This transfer arrangement enables a Customer to transfer a DS1 channel between two other DS1 channels.

An office connection is required for each DS1 channel connected to this arrangement.

A key-activated control channel or 1 X N Control Arrangement (see Sec. 15, following) is required to operate the transfer arrangement. The control channel must be provided from the AT&T Central Office to the control location of the Customer. The key and channel must be provided by the Customer. The control channel will require an office connection. Access to the 1 X N Control Arrangement requires a dial up data station at the AT&T Central Office.

	USOC	MONTHLY RATE
- Per Transfer Arrangement	XTA++	ICB

ADMINISTRATIVELY
APPROVED FOR FILING

7. ACCUNET® T1.5 SERVICE-INTEROFFICE

ORIGINAL

7.2 SERVICE COMPONENTS (Cont'd)

7.2.4 OFFICE FUNCTIONS (Cont'd)

B. M-24 MULTIPLEXING

The M-24 Multiplexing office function permits the derivation of up to 24 channels from an ACCUNET T1.5 Service.

The M-24 Multiplexing office function, when connected to an ACCUNET T1.5 Service and used in conjunction with an M-24 Multiplexing office function in the same or at another AT&T Central Office, or with compatible Customer-provided multiplexing equipment located at a Customer's premises, provides for the derivation of up to 24 channels at the AT&T Central Office(s).

Non-recurring office connection charges apply to each derived channel ordered or rearranged subsequent to the initial installation of the M-24 Multiplexing office function. The non-recurring central office connection charges do not apply to any derived channels installed concurrently with the initial installation of the M-24 office function.

Voice grade channels derived at the central office may be connected to a switched or non-switched voice grade service in the same or different rate center area. Digital channels derived at the central office may be connected to another digital service in the same AT&T Central Office. AT&T does not warrant the quality of transmission on every possible interconnection.

Customer-provided multiplexing used in conjunction with an M-24 Multiplexing office function must transmit a standard D-type formatted 1.544 Mbps signal as described in Technical Publication-PUB 43801. The Customer is responsible for furnishing the signaling for the derived voice grade application at its premises. When the M-24 Multiplexing office function is used to provide intermediate bit rates for ACCUNET Spectrum of Digital Services, Customer-provided multiplexing must transmit signal formats in accordance with specifications described in Technical Publication-PUB 54019A, Addendum 1. (See Technical Publication Information in Preface.)

	USOC	NONRECURRING CHARGE
- per M-24 Multiplexing office function	MSF24	ICB

ADMINISTRATIVELY
APPROVED FOR FILING

ORIGINAL

7. ACCUNET® T1.5 SERVICE-INTEROFFICE

7.2 SERVICE COMPONENTS (Cont'd)

7.2.4 OFFICE FUNCTIONS (Cont'd)

D. DS1 SWITCH PORT

This office function provides electronic cross connection of DS0 Channels to provide Customer Controlled Reconfiguration on access to ACCUNET® Reserved Digital Service (ARDS) as follows:

1. Customer Controlled Reconfiguration

Customer Controlled Reconfiguration permits the Customer to electronically rearrange DS0 channels between DS1 channels. This can be done between all of a Customer's DS1 channels terminating in the same AT&T Central Office. Customer Controlled Reconfiguration requires one DS1 Switch Port for each of the central office connections. In addition Customer Controlled Reconfiguration requires Customer-provided terminal equipment and private line service or a dial-up service to send the Customer's instructions to the network control center.

If the Customer elects to use dial-up services to access the network control center, an AT&T 800 Service or its equivalent is required to provide secure dial-back capability. The network control center then automatically provides the Customer with switching control and status reports. An office connection is required for each DS1 channel connected to a DS1 Switch Port.

Additional details are provided in Technical Publication-PUB 54015.

2. ACCUNET Reserved Digital Service (ARDS)

A DS1 Switch Port office function connects a DS1 channel to the ARDS Network. An office connection is required for each DS1 channel connected to a DS1 Switch Port and for the connection of the DS1 Switch port to the ARDS network.

	USOC	MONTHLY RATE	NONRECURRING CHARGE
- per DS1 Switch Port	CUR++	ICB	ICB

ADMINISTRATIVELY
APPROVED FOR FILING

7. ACCUNET® T1.5 SERVICE-INTEROFFICE

ORIGINAL

7.2 SERVICE COMPONENTS (Cont'd)

7.2.4 OFFICE FUNCTIONS (Cont'd)

E. ACCESS PROTECTION CAPABILITY

This office function provides protection against failure for a Local Channel or other access. Protection is furnished through the use of a switching arrangement that automatically switches to a spare channel when the working channel fails. The spare channel is not included and must be ordered separately. This office function also requires compatible equipment to be provided by the Customer at its premises.

	USOC	INSTALLATION CHARGE
- per Access Protection Capability office function	APZ	ICB

F. NETWORK PROTECTION CAPABILITY (NPC)

This office function provides protection against failure for an Interoffice Channel (IOC). Protection is furnished through the use of a switching arrangement that automatically switches to a separately routed, fiber optic protection channel when the working channel fails. The protection channel and the switching arrangement are provided when NPC is ordered.

NPC is offered where facilities are available. If this arrangement is not available, the Customer may cancel the request without penalty.

	USOC	MONTHLY RATE	NONRECURRING CHARGE
- per Protected IOC	APZNP	ICB	ICB

ADMINISTRATIVELY
APPROVED FOR FILING

ORIGINAL

8. ACCUNET® T45 SERVICE-INTEROFFICE

8.1 GENERAL

ACCUNET® T45 Services provide for the transmission of 44.736 Mbps digital signals.

ACCUNET® T45 Services use a framed DS3 signal format. When used to carry Multiplexed DS1 Channels, the signal carried within the framed DS3 format must contain Extended Superframe Formatted DS1 channels, to a maximum of 28.

8.1.1 DESCRIPTION

ACCUNET® T45 Services are configured by combining service components to connect customer locations within the State of Arizona. ACCUNET T45 Inter-office Channels are furnished on a two-point basis only.

8.1.2 SIGNALS AT THE AT&T CENTRAL OFFICE

All signals carried by local channels or other access and presented to the AT&T central offices must meet certain signal and format constraints. These constraints are described in the following Technical Publications (see Technical Publication Information in Preface).

CB119 - Interconnection Specification for Digital Cross Connects
PUB 43802 - Digital Multiplexer Requirements and Objectives
PUB 54014 - ACCUNET T45 Service Description and Interface Specifications
PUB 54014, Addendum 2
PUB 54016 - Requirements for Interfacing Digital Terminal Equipment to Services Employing the Extended Superframe Format.

8.1.3 REGULATIONS

In addition to the Regulations in Section 2, preceding, the following apply.

A. AVAILABILITY OF ACCUNET T45 SERVICES

ACCUNET T45 Services are available from the designated AT&T central offices listed in AT&T's Business Service Guide. ACCUNET T45 Services may not be available in every LATA.

B. CREDIT ALLOWANCES FOR INTERRUPTIONS

For purposes of determining credit allowances in accordance with the regulations in Section 2, preceding, an ACCUNET T45 Service is considered to be interrupted when:

ADMINISTRATIVELY
APPROVED FOR FILING

8. ACCUNET® T45 SERVICE-INTEROFFICE

ORIGINAL

8.1 GENERAL (Cont'd)

8.1.3 REGULATIONS (Cont'd)

B. CREDIT ALLOWANCES FOR INTERRUPTIONS (Cont'd)

- there has been a loss of continuity, or

- 300 or more seconds of transmission containing errors occur in a 15 minute period on a DS3 level.

1. SERVICE ASSURANCE WARRANTY

For ACCUNET T45 Services' Customers, an interruption allowance in lieu of that specified in 2.4.6.F.1. preceding will be made for each reported interruption, in accordance with the table shown in the Price List, following. If more than one interruption is reported on a ACCUNET T45 Service (including a local channel obtained from AT&T Local Channel Services Tariff 11) in a given month, each subsequent interruption is considered independently in calculating total credits for that channel on the following month's bill. However, the cumulative credit allowances may not exceed 100 percent, per channel, in a given month. Credit may not be carried over to subsequent months.

The Customer's recurring charges for the channel and associated rate elements in the month that the interruption occurs will be the basis for calculation of the credit allowance for that month. Discounts due to pricing plans will be applied prior to the application of credit allowances.

8.1.4 MINIMUM PAYMENT PERIOD

Except for IOCs provided under an optional fixed rate plan, the minimum payment period for all ACCUNET T45 Service components is one month.

The minimum payment period for IOCs furnished under an optional fixed rate plan depends upon the conditions under which the Customer discontinues service (see 8.1.6 following).

ADMINISTRATIVELY
APPROVED FOR FILING

8. ACCUNET® T45 SERVICE-INTEROFFICE

ORIGINAL

8.1 GENERAL (Cont'd)

8.1.5 NOTICE OF DISCONTINUANCE

The Notice of Discontinuance for all ACCUNET T45 Service components is one month. Recurring charges will apply for a period of one month from the date AT&T receives the discontinuance notice or until the requested discontinuance date, whichever period is longer. These charges will apply during this period whether or not the Customer continues to use the service. For purposes of calculating the discontinuance charge for Customers subscribing to a fixed rate plan, the Customer's current fixed rate will apply until the expiration date of the fixed rate plan and conventional monthly rates will apply thereafter.

8.1.6 FIXED RATE IOC PLANS

One, two, three, four and five year fixed rate plans are available as an alternative to conventional monthly rates for the Interoffice Channel component of ACCUNET T45 service. If a fixed rate plan is selected, the recurring monthly charge (consisting of a fixed and a mileage-based component) will be the fixed rate in effect on the date that the order is confirmed by AT&T.

A. DISCONTINUANCE OF A FIXED RATE IOC PLAN-WITHOUT LIABILTY

The Customer may discontinue an ACCUNET T45 IOC furnished under a fixed rate plan prior to the expiration of the applicable term, without liability, under the following condition:

1. If the Customer enters into a replacement plan for either ACCUNET T45 Service or other AT&T services with an equal or greater revenue commitment, provided the expiration date of the new plan is on or after the expiration date of the unexpired plan.

ADMINISTRATIVELY
APPROVED FOR FILING

8. ACCUNET® T45 SERVICE-INTEROFFICE

ORIGINAL

8.1 GENERAL (Cont'd)

8.1.6 FIXED RATE IOC PLANS (Cont'd)

B. DISCONTINUANCE OF A FIXED RATE IOC PLAN-WITH LIABILITY

Discontinuance of a service furnished under a fixed rate plan, prior to the expiration of the applicable term, will result in Customer liability as specified below:

1. For service discontinued prior to the completion of the first year of service the Customer is liable for one-hundred percent of the total monthly charges for the unexpired portion of the first year of service plus fifty percent of the total monthly charges for the remainder of the applicable term.

2. For service discontinued after the completion of the first year of service and more than three months prior to the expiration date of the fixed rate plan, the Customer is liable for fifty percent of the total monthly charges for the unexpired portion of the applicable term. For service discontinued within three months of the expiration date of the fixed rate plan, Notice of Discontinuance provisions, as specified in 8.1.5. preceding, apply.

Payment of the total amounts owed by the Customer under 8.1.6.B.1. or 8.1.6.B.2. will be due within thirty days of the date of service discontinuance.

C. EXPIRATION OF RENEWAL OF A FIXED RATE IOC PLAN

Upon expiration of a fixed rate plan the Customer has the option to obtain the same IOC under a new fixed rate plan or to obtain service under the monthly rate plan.

The Customer may renew service under a new fixed rate plan by notifying AT&T in writing anytime prior to the expiration of the current fixed rate plan.

To continue the same service under monthly rates, no action is required on the part of the Customer. Upon expiration of a fixed rate plan, and unless notification to the contrary is received, the Customer's service will automatically be continued at rates under the monthly rate plan in effect at that time. In this case the Customer will be considered to have satisfied the one-year minimum payment period.

Notice of Discontinuance provisions, as specified in 8.1.5 preceding, apply if the Customer elects not to renew service.

ADMINISTRATIVELY
APPROVED FOR FILING

ORIGINAL

8. ACCUNET® T45 SERVICE-INTEROFFICE

8.2 SERVICE COMPONENTS AND RATES

The components of an ACCUNET T45 Service are Inter Office Channels, Office Connections and Office Functions.

8.2.1 INTER OFFICE CHANNEL

An ACCUNET T45 Interoffice Channel (IOC) is a channel between two AT&T central offices, points of connection, or a combination thereof, on AT&T's digital fiber optic network or on terestrial digital facilities at the discretion of the Customer when fiber optic facilities are not available.

A. RATES

The cost and rate levels are developed on a case by case basis and will not be priced below direct marginal costs. Proposed rates for new customers and changes to rates for existing customers and cost support information will be submitted to the Utilities Division for approval at least 14 days prior to the proposed effective date.

USOC	MONTHLY CHARGES PER CHANNEL
1LNVX	ICB

8.2.2 OFFICE CONNECTIONS

A. ACCESS CONNECTION

An Access Connection provides the function, at an AT&T central office, of connecting Local Channels obtained from Schedule 11, other access, or an AT&T enhanced service to an IOC, office function, another Local Channel, or other access. One access connection applies for each Local Channel, other access or AT&T enhanced service connected.

USOC	MONTHLY RATE	NONRECURRING CHARGE
041AC	ICB	ICB

B. FUNCTION CONNECTION

A Function Connection provides the function, at an AT&T central office, of connecting an office function to an IOC, or another office function.

USOC	MONTHLY RATE	NONRECURRING CHARGE
NRZFC	ICB	ICB

ADMINISTRATIVELY
APPROVED FOR FILING

8. ACCUNET® T45 SERVICE-INTEROFFICE

ORIGINAL

8.2 SERVICE COMPONENTS AND RATES (Cont'd)

8.2.3 OFFICE FUNCTIONS

A. M28 MULTIPLEXING

The M28 Multiplexing Office Function provides for the derivation/combination of up to 28 DS1 channels from/into a 44.736 Mbps digital signal carried by an ACCUNET T45 IOC, a Terrestrial 45 Mbps Local Channel Service (from Tariff 11), or Other Access.

The M28 Multiplexing Office Function is used in conjunction with another M28 Multiplexing Office Function in the same or at another AT&T central office, or with compatible Customer-provided multiplexing equipment located at the Customer's premises. Customer-provided multiplexing used in conjunction with ACCUNET T45 Service must transmit a standard DS3 type formatted 44.736 Mbps signal as described in Technical Publication-PUB 43802 (see Technical Publication Information, Preface).

An ACCUNET T45 Office Connection is required to connect the 44.736 Mbps digital signal to this Office Function. In addition, ACCUNET T1.5 Office Connections are required to connect each DS1 channel to this ofice function.

USOC	MONTHLY RATE	NONRECURRING CHARGE
M2X	ICB	ICB

B. NETWORK PROTECTION CAPABILITY (NPC)

This office function provides protection against failure for an Interoffice Channel (IOC). Protection is furnished through the use of a switching arrangement that automatically switches to a separately routed, terrestsrial digital protection channel when the working channel fails. The protection channel and the switching arrangement are provided when NPC is ordered.

NPC is offered where facilities are available. If NPC for the entire facility is not available when ordered, or becomes unavailable due to network arrangements, NPC may, at the Customer's request, only be furnished on a partial basis. The Customer will be advised before parital NPC is provided and may cancel or discontinue the NPC if partial NPC is not acceptable. No cancellation charge will apply if the facilities are not available or the Customer does not accept the partial NPC.

ADMINISTRATIVELY
APPROVED FOR FILING

8. ACCUNET® T45 SERVICE-INTEROFFICE

ORIGINAL

8.2 SERVICE COMPONENTS AND RATES (Cont'd)

8.2.3 OFFICE FUNCTIONS (Cont'd)

B. NETWORK PROTECTION CAPABILITY (NPC)(Cont'd)

USOC	MONTHLY RATE	NONRECURRING CHARGE
APZNP	ICB	ICB

C. ACCESS PROTECTION CAPABILTY

This office function provides protection against failure of a Local Channel or other access. Protection is furnished through the use of a switching arrangement that automatically switches to a spare channel when the working channel fails, as described in Technical Publication - PUB 54014, Addendum 2 (see Technical Publication Information, Preface). The spare channel is not included and must be ordered separately. This office function also requires compatible equipment to be provided by the Customer at its premises.

USOC	MONTHLY RATE	NONRECURRING CHARGE
APZ	ICB	ICB

D. SWITCH PORT

This office function connects a DS3 channel to the ARDS Network. An office connection is required for each DS3 channel connected to a DS3 Switch Port and for the connection of the DS3 Switch Port to the ARDS network.

USOC	MONTHLY RATE	NONRECURRING CHARGE
CURD3	ICB	ICB

8.2.4 CHANNEL OPTIONS

Channel options are features added to a channel to change or augment its transmission characteristics.

A. ENHANCED DIVERSITY ROUTING

Under this option, two or more ACCUNET T45 IOCs are furnished entirely over physically and electrically separated transmission paths, such that a failure at one geographic location will not cause the loss of both paths.

ADMINISTRATIVELY
APPROVED FOR FILING

8. ACCUNET® T45 SERVICE-INTEROFFICE

ORIGINAL

8.2 SERVICE COMPONENTS AND RATES (Cont'd)

8.2.4 CHANNEL OPTIONS (Cont'd)

A. ENHANCED DIVERSITY ROUTING(Cont'd)

The Enhanced Diversity Routing (EDR) is offered where separate facilities are available, subject to routing or performance constraints resulting from the diverse routing and made known to the Customer prior to ordering. If complete EDR is not available when ordered, or if it becomes unavailable at a later date due to network rearrangements, EDR may be furnished on a partial basis only at the Customer's request. The Customer will be advised before partial EDR is provided and may cancel or discontinue the EDR option if the partial EDR is not acceptable. No cancellation charge will apply if the facilities are not available or the Customer does not accept the partial EDR. When EDR is ordered, an installation charge and a monthly charge apply for each IOC in an IOC relationship pair on which EDR is provided, i.e., IOC No. 1 is diverse from IOC No. 2.

Example 1: The Customer has four IOCs and specifies tha IOC No. 1 and IOC No. 2 be diversely routed. The reltionship pair is 1&2. Two EDR monthly and installation charges apply, one for each IOC in the relationship pair. EDR charges will not apply to IOC Nos. 3 and 4.

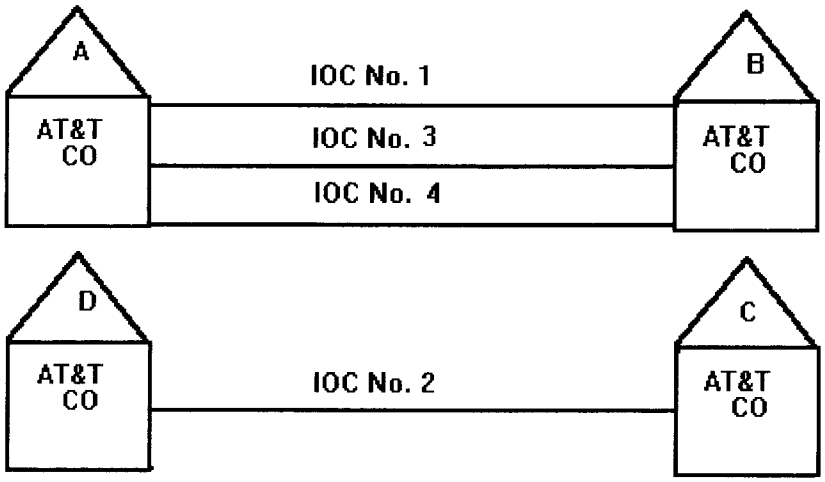

ADMINISTRATIVELY
APPROVED FOR FILING

8. ACCUNET® T45 SERVICE-INTEROFFICE

ORIGINAL

8.2 SERVICE COMPONENTS AND RATES (Cont'd)

8.2.4 CHANNEL OPTIONS (Cont'd)

A. ENHANCED DIVERSITY ROUTING (Cont'd)

Example 2: The Customer has four IOCs and specifies the IOC Nos. 1 and 2 be diversely routed from IOC Nos. 3 and 4. The IOC relationship pairs are 1&3, 2&4, 1&4, 2&3. Eight EDR monthly and installation charges apply, one for each IOC in the relationship pair.

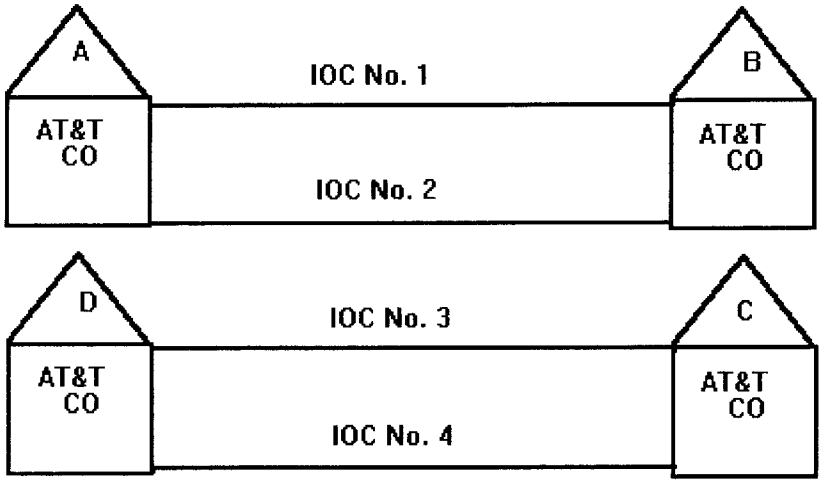

ADMINISTRATIVELY
APPROVED FOR FILING

8. ACCUNET® T45 SERVICE-INTEROFFICE

ORIGINAL

8.2 SERVICE COMPONENTS AND RATES (Cont'd)

8.2.4 CHANNEL OPTIONS (Cont'd)

A. ENHANCED DIVERSITY ROUTING (Cont'd)

Example 3: The Customer has three IOCs and specifies that each of the IOCs be diversely routed. The IOC relationship pairs are 1&2, 1&3, 2&3. Six EDR monthly and installation charges apply, one for each IOC in the relationship pair.

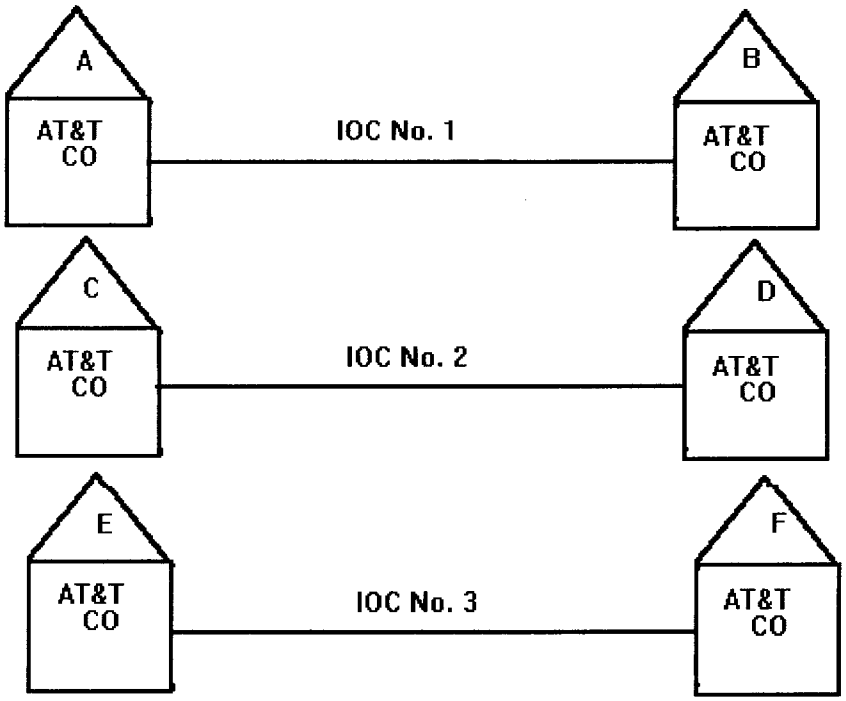

ADMINISTRATIVELY
APPROVED FOR FILING

8. ACCUNET® T45 SERVICE-INTEROFFICE

ORIGINAL

8.2 SERVICE COMPONENTS AND RATES (Cont'd)

8.2.4 CHANNEL OPTIONS (Cont'd)

A. ENHANCED DIVERSITY ROUTING (Cont'd)

Example 4: The Customer has two IOCs and specifies that IOC No. 1 be diversely routed from IOC No. 2. Central Office B is the only T45 POP in the LATA: Customer requests partial enhanced diversity routing. The IOC relationship pair is 1&2. Two EDR monthly and installation charges apply, one for each IOC in the relationship pair.

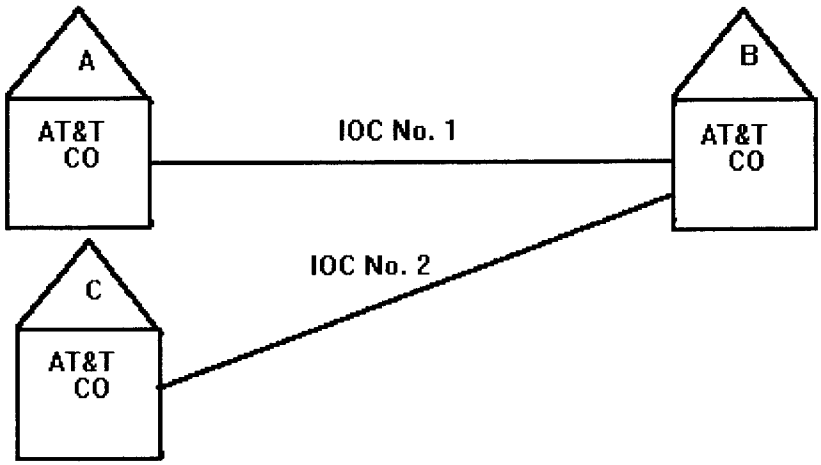

	USOC	MONTHLY RATE	NONRECURRING CHARGE
- per each IOC relationship pair	DY7D1	ICB	ICB

ADMINISTRATIVELY
APPROVED FOR FILING

ORIGINAL

9. ACCUNET® SPECTRUM OF DIGITAL SERVICES (ASDS)-INTEROFFICE

9.1 GENERAL

ACCUNET Spectrum of Digital Services (ASDS) affords a Customer the opportunity to select channels at various digital speeds.

9.1.1 DESCRIPTION

ASDS is suitable for the simultaneous two-way transmission of data at synchronous speeds of 9.6 kbps, either 56 or 64 kbps, or a combination of 64 kbps signals to achieve speeds of 128 kbps, 256 kbps, 384 kbps, 512 kbps or 768 kbps. ASDS connects customer locations within the State of Arizona. ASDS may be two-point or multi-point. ACC Business, a non-AT&T branded division, is introducing intrastate private line products. All terms and conditions, rates and charges are identical to the existing AT&T ACCUNET® Spectrum of Digital Services offered in this tariff.

The transmission specifications and performance parameters for 56 or 64 kbps service are contained in Technical Publications-PUB 43202 and PUB 62310; and in Technical Publications-PUB 54019 and PUB 54019A, Addendum 1 for 128 kbps, 256 kbps, 384 kbps, 512 kbps and 768 kbps service. Interface specifications for ASDS are contained in Technical Publication-PUB 62411. (See Technical Publication Information in Preface.)

Performance Parameters for 9.6 kbps and 56/64 kbps between AT&T central offices:

Airline Miles	% Availability	% Error Free Seconds
0 - 250	99.85	99.96
251 - 1000	99.80	99.86
1001 - Over	99.75	99.75

9.1.2 REGULATIONS

In addition to the regulations in Section 2 preceding, the following apply.

A. AVAILABILITY OF ASDS

ASDS is available from the AT&T central offices listed in the AT&T Business Services Guides. ASDS may not be available in every LATA or to all rate center areas within a LATA and is dependent on the availability of suitable access.

B. CREDIT ALLOWANCES FOR INTERRUPTIONS

For purposes of determining credit allowances, in accordance with the regulations in 2.4.6 preceding, ASDS is considered to be inoperative when there has been a loss of continuity, or when 300 or more seconds of transmission errors occur in a 15-minute period.

ADMINISTRATIVELY
APPROVED FOR FILING

9. ACCUNET® SPECTRUM OF DIGITAL SERVICES (ASDS)-INTEROFFICE

ORIGINAL

9.1 GENERAL (Cont'd)

9.1.2 REGULATIONS (Cont'd)

C. CONNECTION TO OTHER SERVICES

When ASDS is connected to other services as indicated below, the design objective applies only to the ASDS.

1. Local Channel Services or Other Access

Voice Grade Local Channel Services, 9.6 kbps and 56 kbps Digital Data Local Channel Services, ACCUNET T1.5 Local Channel Services, or other access may be connected to ASDS at an AT&T central office.

The availability of Local Channel Services to connect to ASDS is as follows:

Voice Grade	- available at those ASDS central offices designated in the AT&T Business Services Guides which also offer Voice Grade Services. These local channels are for connection only to 56/64 kbps ASDS. When Voice Grade Local Channel Service is connected to ASDS at each end of the service, the end-to-end performance parameters are stated in AT&T's Business Services Guides.
9.6 kbps Digital Data	- available at ASDS central offices which also offer DATAPHONE® Digital Services.
56 kbps Digital Data	- available at ASDS central offices which also offer DATAPHONE Digital Services.
9.6 kbps Generic Digital	- available at ASDS central offices which also offer Generic Digital Services.
56 kbps Generic Digital	- available at ASDS central offices which also offer Generic Digital Services.
ACCUNET T1.5	- available at all ASDS central offices which also offer ACCUNET T1.5 Services.

ADMINISTRATIVELY
APPROVED FOR FILING

9. ACCUNET® SPECTRUM OF DIGITAL SERVICES (ASDS)-INTEROFFICE

9.1 GENERAL (Cont'd)

ORIGINAL

9.1.2 REGULATIONS (Cont'd)

C. CONNECTION TO OTHER SERVICES (Cont'd)

1. Local Channel Services or Other Access (Cont'd)

All connections of other access to ASDS are on an individual case basis.

ACCUNET T1.5 Local Channel Service can be used to connect ASDS to Customer locations at digital speeds above 56/64 kbps. These connections must be made through M-24 Multiplexing office functions.

When ACCUNET T1.5 access is used with ASDS, it must be in a framed DS1 format. When used to carry multiplexed DS0 channels, the signal carried within the framed DS1 format must contain Extended Superframe formatted DS0 channels to a maximum of 24.

For each connection of a Local Channel Service or other access to ASDS, an office connection is required. When connection is through an office function, more than one office connection may be required.

2. Other AT&T Services

Other compatible AT&T services, excluding Voice Grade Service and DATAPHONE® Digital Service, may be connected to ASDS through an office function at an AT&T central office. When other AT&T services are connected to ASDS to form a through connection, the performance parameter of the connected services is that of the service having the least stringent performance parameter. An ASDS central office connection is required.

ADMINISTRATIVELY
APPROVED FOR FILING

9. ACCUNET® SPECTRUM OF DIGITAL SERVICES (ASDS)-INTEROFFICE

ORIGINAL

9.1 GENERAL (Cont'd)

9.1.3 MINIMUM PAYMENT PERIOD

The minimum payment period for ASDS components is one month.

9.1.4 NOTICE OF DISCONTINUANCE

The Notice of Discontinuance for ASDS components is fifteen days unless they are connected to Accunet® T1.5 access. In such case, the Notice of Discontinuance is 30 days.

Recurring charges apply for a period of fifteen days from the date AT&T receives the discontinuance notice or until the requested discontinuance date, whichever is longer. The charges will continue to apply whether or not the Customer continues to use the service.

9.1.5 CANCELLATION CHARGE

As specified in Section 2, preceding, a cancellation charge will apply, per component, for service orders canceled by the Customer on or after the SID.

Maximum Cancellation Charge Schedule[1]

			CRITICAL DATES					
Component	USOC	APP	SID	DLRD	RID	WOT	CTA	DD
9.6 kbps and 56/64 kbps IOC	NRZCN	0	$29.93	$33.92	$45.89	$107.74	$199.53	$199.53
All Other IOCs	NRZCN	0	$32.29	$36.60	$49.51	$19.25	$212.28	$212.28
9.6 kbps and 56/64 kbps Office Connections	NRZCN	0	$30.87	$34.99	$47.34	$111.14	$205.80	$205.80
All Other Office Connections	NRZCN	0	$78.75	$89.25	$120.75	$283.50	$525.00	$525.00

NOTE 1: See Price List for current rates.

ADMINISTRATIVELY
APPROVED FOR FILING

9. ACCUNET® SPECTRUM OF DIGITAL SERVICES (ASDS)-INTEROFFICE

ORIGINAL

9.1 GENERAL (Cont'd)

9.1.5 CANCELLATION CHARGE (Cont'd)

The applicable charge is based on the last scheduled critical date reached in the service order process. For example, for an order involving two 56 kbps channel office connections which is canceled after the SID but prior to the DLRD, a total charge of $90.60 will apply, consisting of $31.05 for each of the two office connections and $28.50 for the IOC.

9.1.6 SELECT SAVINGS PLAN (SSP)

Select Savings plans with terms from one to five years are available as an alternative to conventional monthly rates for ASDS Interoffice Channels (IOCs) and service components. In exchange for a term commitment on each individual service, the Customer is given monthly rates that are discounted for the duration of the term. Rates may change from time to time however, the discount levels applied will not change during the term of the plan.

Components disconnected from a service under a plan will not affect the discount of the remaining portion of the service.

Non-recurring charges will not be discounted. When a Customer requests service, the non-recurring charges will be applied based on the rates in effect on the date that the service order is completed by AT&T.

A. SSP STRUCTURE

A select saving plan will include all ASDS service components.

The plan will be available in one month increments from twelve months (one year) through sixty months (five years). The discount is fixed for the life of a plan. Monthly rates for all months will be discounted as shown in the Price List.

B. SSP COMMITMENT AND PLAN RESTRICTIONS

The Customer must commit each individual service into a Select Savings Plan. Each service must include all AT&T Private Lines Services Tariffs 9 and 11 components under a plan. Both existing and new services are eligible. The following are not eligible for inclusion in a Select Savings Plan:

Individual Case Basis (ICB) rates
Local Channel Special Routing

ADMINISTRATIVELY
APPROVED FOR FILING

9. ACCUNET® SPECTRUM OF DIGITAL SERVICES (ASDS)-INTEROFFICE

9.1 GENERAL (Cont'd)

ORIGINAL

9.1.7 SELECT SAVINGS PLAN (SSP) (Cont'd)

C. DISCONTINUANCE OF A SSP - WITHOUT LIABILITY

The Customer may terminate a Select Savings Plan without liability under the following conditions:

1. An ASDS Customer with 9.6 kbps or 56 kbps service and voice grade access may replace their end to end service with a new 9.6 kbps or 56 kbps service with digital access, provided the replacement service is enrolled in a Select Savings Plan with an expiration date equal to or later than that of the service being replaced.

2. An existing SSP service may be replace with a new AT&T ACCUNET® digital service of a higher speed, provided the replacement service, if it is ASDS, is enrolled in a SSP that has an expiration date that is equal to or later than that of the service being replaced. The installation date requested for the new ACCUNET® service must be on or before the requested disconnect date of the service being replaced.

3. A Customer may also move an existing SSP service to a different location(s) or change the AT&T point-of-presence provided that the installation date requested for the move and/or change is on or before the requested disconnect date, and both installation and disconnect requests are made concurrently. The moved and/or changed service will be subject to the time commitment remaining under the original SSP.

4. If the Customer commits to a new twenty-four through sixty month replacement SSP with an expiration date that is 12 or months later than the expiration date of the plan being replaced. The plan being replaced will terminate on the day preceding the start date of the new plan.

D. DISCONTINUANCE OF A SSP - WITH LIABILITY

Discontinuance of a service and/or service component furnished under a Select Savings Plan, prior to the expiration of the applicable term, will result in Customer liability as specified below:

1. For service discontinued for any reason other than as stated in C. above prior to the completion of the specified term plan the Customer is liable for a percentage of the total non-discounted fixed monthly rates for the remaining portion as shown on the Price List.

ADMINISTRATIVELY
APPROVED FOR FILING

9. ACCUNET® SPECTRUM OF DIGITAL SERVICES (ASDS)-INTEROFFICE

ORIGINAL

9.1 GENERAL (Cont'd)

9.1.7 SELECT SAVINGS PLAN (SSP) (Cont'd)

D. DISCONTINUANCE OF A SSP - WITH LIABILITY (Cont'd)

Payment of the total amounts owed by the Customer under this regulation are due within thirty days of the date the plan is discontinued.

The following examples illustrate how the Customer will be charged for early discontinuance:

Example 1: A 12 month plan is established for a two-point service but the service is discontinued prior to the end of the 9th month. Discontinuance charges will be calculated at 50% of the monthly charges for the remaining portion of the 9th month and all of months 10-12.

Example 2: A 30 month plan is established for a two-point service and the service is disconnected prior to the end of the 22nd month. Discontinuance charges will be calculated at 40% of the monthly charges for the remaining portion of the 22nd month and for all of months 23-24. In addition, discontinuance charges will be calculated at 30% for months 25-30.

Example 3: A 60 month plan is established for a multipoint service but the service is disconnected prior to the end of the 40th month. Discontinuance charges will be calculated at 20% of the remaining portion of the 40th month and for all of months 41-48. In addition, discontinuance charges will be calculated at 10% for months 49-60.

Example 4: A 24 month plan is established for a multipoint service but one location is disconnected prior to the end of the 6th month. Discontinuance charges for all service components associated with the disconnected location will be calculated at 50% of the remaining portion of the 6th month and all of months 7-12. In addition, for the disconnected service components, discontinuance charges will be calculated at 40% for months 13-24. No discontinuance charges are applied to the service components that remain in service at all of the other circuit locations.

ADMINISTRATIVELY
APPROVED FOR FILING

9. ACCUNET® SPECTRUM OF DIGITAL SERVICES (ASDS)-INTEROFFICE

9.1 GENERAL (Cont'd)

ORIGINAL

9.1.7 SELECT SAVINGS PLAN (SSP) (Cont'd)

E. EXPIRATION AND RENEWAL OF A SSP

Upon expiration of a Select Savings Plan, the Customer has the option to obtain a new Select Savings Plan, any MSVPP or other available plan or to obtain service under conventional monthly rates.

If the Customer chooses to subscribe to new Select Savings Plan, the start date of the new plan may not be earlier than the day following the expiration date of the former plan.

To continue the same service under monthly rates, no action is required on the part of the Customer. Upon expiration of the Select Savings Plan, and unless notification to the contrary is received, the Customer's service will automatically be continued at rates specified under the monthly rate plan in effect at that time.

The Customer may renew service under a new Select Savings Plan by notifying AT&T in writing anytime prior to the expiration of the current Select Savings Plan.

ADMINISTRATIVELY
APPROVED FOR FILING

9. ACCUNET® SPECTRUM OF DIGITAL SERVICES (ASDS)-INTEROFFICE

ORIGINAL

9.2 SERVICE COMPONENTS AND RATES

9.2.1 INTEROFFICE CHANNEL (IOC)

IOCs are available between AT&T central offices.

A. RATES

The monthly charge for an IOC includes a fixed rate and a mileage sensitive rate. (See Calculation of Charges, following.)

	MILEAGE BAND	USOC	MAXIMUM MONTHLY CHARGES PER CHANNEL[1] FIXED	PER MILE
- per 9.6 kbps Channel	1- 50	1LNVX	$ 79.20	$ 3.13
	51-100		163.90	1.45
	101-over		272.80	0.36
- per 56/64 kbps Channel	1- 50	1LNVX	$ 79.20	$ 3.13
	51-100		163.90	1.45
	101-over		272.80	0.36
- per 128 kbps Channel	1- 50	1LNVX	$151.80	$ 5.94
	51-100		312.40	2.74
	101-over		519.20	0.68
- per 256 kbps Channel	1- 50	1LNVX	$304.70	$11.87
	51-100		623.70	5.48
	101-over		1037.30	2.32
- per 384 kbps Channel	1- 50	1LNVX	$ 456.50	$17.81
	51-100		9310.10	8.22
	101-over		1557.60	2.01
- per 512 kbps Channel	1- 50	1LNVX	$ 577.50	$22.50
	51-100		1183.60	10.38
	101-over		1967.90	2.53
- per 768 kbps Channel	1- 50	1LNVX	$ 866.80	$33.74
	51-100		1775.40	15.57
	101-over		2951.30	3.81

ADMINISTRATIVELY
APPROVED FOR FILING

NOTE 1: See Price List for current rates.

9. ACCUNET® SPECTRUM OF DIGITAL SERVICES (ASDS)-INTEROFFICE

9.2 SERVICE COMPONENTS AND RATES (Cont'd)

ORIGINAL

9.2.1 INTEROFFICE CHANNEL (IOC) (Cont'd)

B. MULTIPLE CHANNEL PRICING DISCOUNT

Multiple Channel Pricing (MCP) is available as a discount to conventional monthly rate plans for subrate 9.6 kbps or DSO 56/64 kbps Interoffice Channels. MCP provides a discount for two or more two-point IOC channels located between the same AT&T Central Offices, that have a digital office function obtained from this schedule at each end, e.g. M-24 Multiplexing office function, transfer arrangements, Subrate Data Multiplexing, or Customer Controlled Reconfiguration.

MCP Discounts

Number of IOCs	USOC	Percent Discount
2	1LNVX	6%
3	1LNVX	7%
4	1LNVX	8%
5	1LNVX	8%
6	1LNVX	9%
7	1LNVX	10%
8	1LNVX	11%
9	1LNVX	12%
10+	1LNVX	13%

Charges and penalties associated with the conversion of existing intermediate bit rate (IBR) channels to individual 64 kbps channels will be waived for up to 90 days following the effective date of the Multiple Channel Pricing Discount, for Customers who request conversion for the purpose of obtaining this discount.

ADMINISTRATIVELY
APPROVED FOR FILING

9. ACCUNET® SPECTRUM OF DIGITAL SERVICES (ASDS)-INTEROFFICE

9.2 SERVICE COMPONENTS AND RATES (Cont'd)

ORIGINAL

9.2.1 INTEROFFICE CHANNEL (IOC) (Cont'd)

C. CALCULATION OF CHARGES

To calculate the monthly recurring charges for an IOC, first determine the airline mileage between AT&T central offices (see Calculation of Airline Mileage, 4.1.2 preceding). Using the appropriate IOC rate for the service ordered, multiply the total airline miles by the mileage rate.

To this figure add the fixed rate for the service. The sum of the mileage rate and the fixed rate is the total monthly charge for the IOC.

Example:

A Customer orders four ASDS 56/64 kbps channels between AT&T central offices that are 107 miles apart.

107 x the per mile rate for a 56/64 kbps channel ($0.34) x 4	$145.52
Add the Fixed Rate ($261.22) x 4	$1,044.88
Total Monthly IOC Charge	$1,190.40

MCP Discount Example:

A Customer has six ASDS 56 kbps IOCs between the AT&T Central Offices in Phoenix and Tucson. Four of the six IOCs have office functions from this schedule at both offices and qualify for the MCP Discount. The MCP Discount is applied as follows:

Fixed Rate	$ 261.22
Mileage Rate (107 miles x $.34)	$ 36.38
Total Charge Per IOC	$ 297.60
x 6 IOCs	x 6
Total Charge	$1785.60

The total non-discounted charge for the above service is $1,785.60. The MCP discount is applied as follows:

Total ASDS charge before discount	$1785.60
Discount on 4 qualifying IOCs	- $ 97.23
8% x ($297.60 x 4)	
Total ASDS Charge	$1690.37

ADMINISTRATIVELY
APPROVED FOR FILING

9. ACCUNET® SPECTRUM OF DIGITAL SERVICES (ASDS)-INTEROFFICE

9.2 SERVICE COMPONENTS AND RATES (Cont'd)

ORIGINAL

9.2.2 OFFICE CONNECTIONS

A. ACCESS CONNECTION

An access connection provides the function, at an AT&T Central Office, of connecting Local Channels obtained from Tariff 11 or other access to an IOC, office function, another Local Channel or other access.

	USOC	MAXIMUM MONTHLY RATE(1)	MAXIMUM NONRECURRING CHARGE(1)
- per connection			
- per 9.6 kbps Channel	041AC	$25.00	$215.60
- per 56/64 kbps Channel	041AC	$25.00	$215.60
- per 128 kbps Channel	041AC	$33.00	$550.00
- per 256 kbps Channel	041AC	$38.50	$550.00
- per 384 kbps Channel	041AC	$44.00	$550.00
- per 512 kbps Channel	041AC	$49.50	$550.00
- per 768 kbps Channel	041AC	$55.00	$550.00

B. FUNCTION CONNECTION

A function connection provides the function, at an AT&T Central Office, of connecting an office function to an IOC, or another office function.

	USOC	MAXIMUM MONTHLY RATE(1)	MAXIMUM NONRECURRING CHARGE(1)
- per connection			
- per 9.6 kbps Channel	NRZFC	N/A	$215.60
- per 56/64 kbps Channel	NRZFC	N/A	$215.60
- per 128 kbps Channel	NRZFC	N/A	$550.00
- per 256 kbps Channel	NRZFC	N/A	$550.00
- per 384 kbps Channel	NRZFC	N/A	$550.00
- per 512 kbps Channel	NRZFC	N/A	$550.00
- per 768 kbps Channel	NRZFC	N/A	$550.00

ADMINISTRATIVELY
APPROVED FOR FILING

NOTE 1: See Price List for current rates.

9. ACCUNET® SPECTRUM OF DIGITAL SERVICES (ASDS)-INTEROFFICE

ORIGINAL

9.2 SERVICE COMPONENTS AND RATES (Cont'd)

9.2.3 CHANNEL OPTIONS

Channel options are features added to a channel to change or augment its transmission characteristics. The channel options available on ASDS are Special Routing, Subrate Data Multiplexing, Signaling Capability, Conditioning and Customer Requested Echo Control.

A. SPECIAL ROUTING OF AN ASDS

An ASDS is normally furnished using a channel selected by AT&T. Various special routing options are available for ASDS excluding 9.6 kbps IOCs, when the required service components are available. These special routing options have associated charges in addition to other applicable charges. If complete Special Routing is not available when ordered, or if it becomes unavailable at a later date due to network rearrangements, Special Routing may be furnished only on a partial basis. The Customer will be advised before partial Special Routing is provided and may cancel the order or discontinue the special routing if the partial Special Routing is not acceptable. No cancellation charge will apply in such cases. The Customer options for special routing are:

- Diversity
- Avoidance
- Custom Diversity

Special Routing is furnished subject to the availability of channel components.

1. Diversity

Diversity is provided when two or more channels are furnished partially or entirely over not more than two physically separated routes. Diversity is furnished for any portion of the channel components or all channel components. If there are more than two services, the services are divided into two groups and furnished partially or entirely over two physically separated routes.

Example 1: The Customer has four IOCs between central offices A and B and specifies that IOC No. 1 be diverse from IOC No. 2. Special Routing charges apply to IOC Nos. 1 and 2. Special Routing charges will not apply to IOC Nos. 3 and 4.

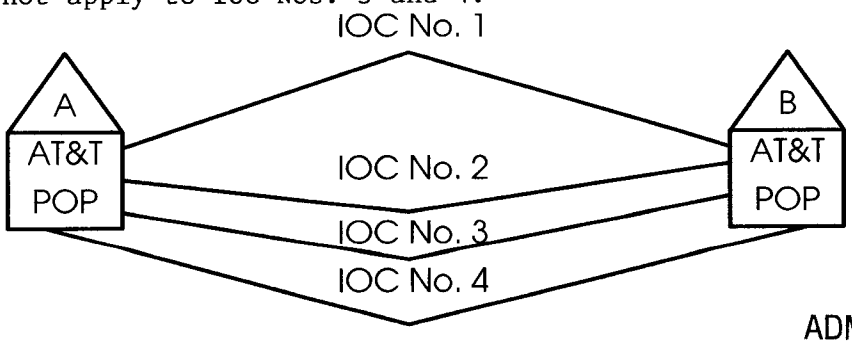

ADMINISTRATIVELY
APPROVED FOR FILING

9. ACCUNET® SPECTRUM OF DIGITAL SERVICES (ASDS)-INTEROFFICE

9.2 SERVICE COMPONENTS AND RATES (Cont'd)

ORIGINAL

9.2.3 CHANNEL OPTIONS (Cont'd)

A. SPECIAL ROUTING OF AN ASDS (Cont'd)

Example 2: The Customer has 4 IOCs between AT&T central offices A and B and specifies that IOC Nos. 1 and 2 be diverse from IOC Nos. 3 and 4. Four Special Routing Charges apply.

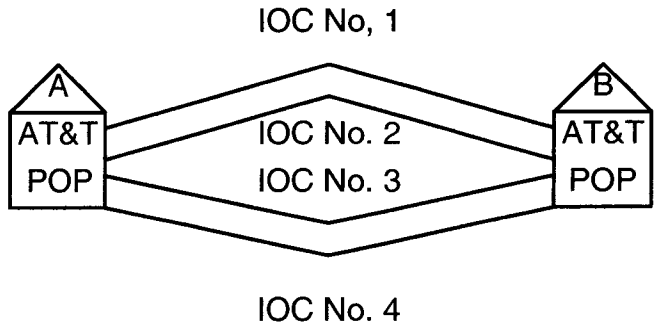

		USOC	MAXIMUM MONTHLY RATE [1]
- Per IOC			
	56/64 kbps	DY7DK	$55.00
	128 kbps	DY7DK	$66.00
	256 kbps	DY7DK	$77.00
	384 kbps	DY7DK	$88.00
	516 kbps	DY7DK	$99.00
	768 kbps	DY7DK	$110.00

2. Avoidance

Avoidance is a service furnished over a channel that avoids a specified geographic location. This option is only available on 56/64 kbps channels.

	USOC	MAXIMUM MONTHLY RATE [1]
- Per IOC	DY7AK	$ 72.88

3. Diversity and Avoidance

A combination of Diversity and Avoidance can be provided simultaneously. This option is only available on 56/64 kbps channels.

	USOC	MAXIMUM MONTHLY RATE [1]
- Per IOC	DY7BK	$ 72.88

NOTE 1: See Price List for current rates.

ADMINISTRATIVELY APPROVED FOR FILING

9. ACCUNET® SPECTRUM OF DIGITAL SERVICES (ASDS)-INTEROFFICE

9.2 SERVICE COMPONENTS AND RATES (Cont'd)

ORIGINAL

9.2.3 CHANNEL OPTIONS (Cont'd)

A. SPECIAL ROUTING OF AN ASDS (Cont'd)

4. Custom Diversity

Three or more IOCs are furnished partially or entirely over not more than three physically separate routes, where separate facilities are available. The designated circuits may originate and/or terminate at the same AT&T Central Offices. If there are more than three circuits, all of which originate and terminate at the same AT&T Central Offices, the circuits are divided into three groups prior to application of the Custom Diversity Option.

Example 1: The Customer has 3 IOCs between AT&T Central Offices A and B and specifies that each be diverse from the others. Three Custom Diversity charges apply.

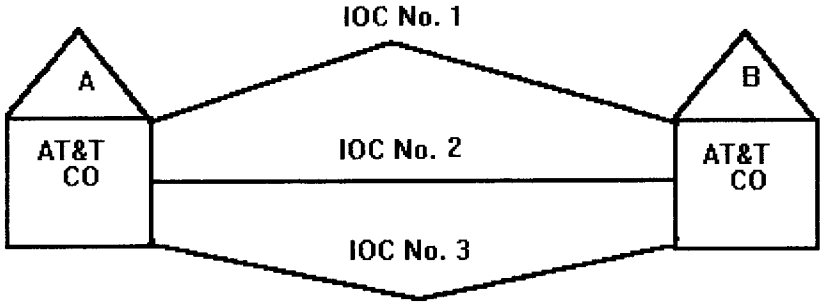

Example 2: The Customer has 3 IOCs between AT&T Central Offices A and B, C and D and specifies that each be diverse from the others. Three Custom Diversity charges apply.

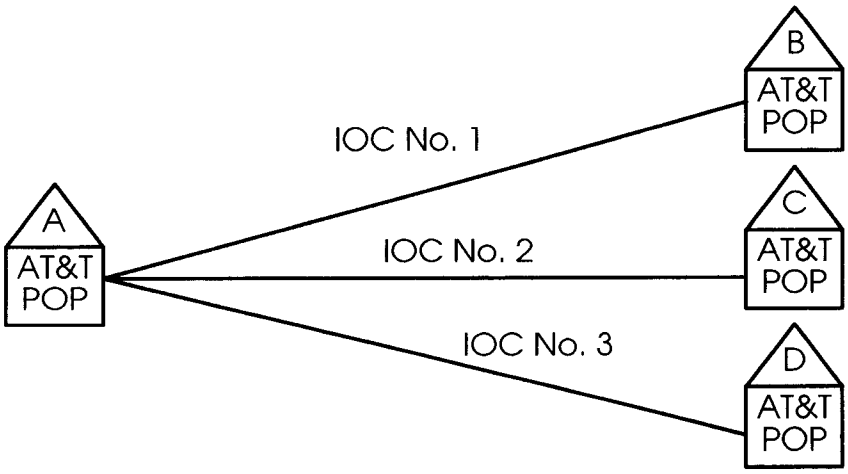

ADMINISTRATIVELY APPROVED FOR FILING

9. ACCUNET® SPECTRUM OF DIGITAL SERVICES (ASDS)-INTEROFFICE

9.2 SERVICE COMPONENTS AND RATES (Cont'd)

ORIGINAL

9.2.3 CHANNEL OPTIONS (Cont'd)

A. SPECIAL ROUTING OF AN ASDS (Cont'd)

	USOC	MAXIMUM MONTHLY RATE[1]
- per IOC		
56/64 kbps	DY7C5	$ 86.90
128 kbps	DY7C5	116.60
256 kbps	DY7C5	173.80
384 kbps	DY7C5	232.10
512 kbps	DY7C5	290.40
768 kbps	DY7C5	405.90

B. SUBRATE DATA MULTIPLEXING (SDM)

The SDM office function permits the derivation of up to five 9.6 kbps digital channels from a 56/64 kbps IOC, from a 56 kbps Digital Data Local Channel equipped with the Secondary Channel Option available from Private Line Local Channel Services Tariff 11, other access, or from a channel derived from an M-24 Multiplexing Office Function (see 7.2.4 preceding).

Customer-provided multiplexing equipment and access used in conjunction with an SDM office function must transmit a DS-0 signal formatted as described in Technical Publication 54075 (see Technical Publication Information in Preface).

SDM derives up to 5 subrate digital data channels at a rate of 9.6 kbps on any channel.

One office connection is required for each digital data channel connected to this office function.

	USOC	MAXIMUM MONTHLY RATE[1]
- Per SDM office function	SD005	$165.00

Note 1: See Price List for current rates.

ADMINISTRATIVELY APPROVED FOR FILING

9. ACCUNET® SPECTRUM OF DIGITAL SERVICES (ASDS)-INTEROFFICE

9.2 SERVICE COMPONENTS AND RATES (Cont'd)

9.2.3 CHANNEL OPTIONS (Cont'd)

ORIGINAL

C. SIGNALING CAPABILITY

Signaling is the process by which one location alerts another location on the same channel or network that it wishes to communicate. Signaling capability permits signals to be transmitted over a service but does not include the capability to initiate or receive those signals. Information regarding interface codes and protocol codes can be found in Technical Publications - PUB 43202 and PUB 62210 (see Technical Publication Information, Preface).

	USOC	MONTHLY RATE
- per IOC	SZGVX	NONE

The types of signaling arrangements available are as follows:

1. Loop Start Loop Signaling

Loop Start Loop Signaling is used for off-premises stations, trunk to station tie lines, and other services which use switching equipment at one end and other terminal equipment (e.g., in a handset) at the other end. This signaling arrangement is designed to pass an open loop (idle condition) or closed loop (seized condition) from the station to the switching equipment. It will transmit dial pulse or multifrequency pulsing signals from the station to the switching equipment, and dialtone and 20 Hertz ringing from the switching equipment to the station.

2. Ground Start Loop Signaling

Ground Start Loop Signaling is used for services which use central office switching equipment on the open end and a PBX on the closed end to provide a PBX to central office trunk. In the operation of this arrangement, the closed end provides a closed loop and momentary ground for the ring conductor as a seizure. The open end provides a ground on the tip and battery on the ring as a seizure. This arrangement will transmit dial tone and 20 Hertz ringing from theopen end to the closed end, and will transmit dial pulses or multifrequency pulsing address signals from the closed end to the open end.

3. E&M Signaling Interface

The E&M Signaling Interface consists of two leads, the E lead and the M lead. The E lead generally receives supervision and pulsing from the distant interface. The M lead generally transmits supervision and pulsing toward the distant interface. This signaling arrangement is used for registered or grandfathered switching equipment tie trunks.

ADMINISTRATIVELY
APPROVED FOR FILING

9. ACCUNET® SPECTRUM OF DIGITAL SERVICES (ASDS)-INTEROFFICE

9.2 SERVICE COMPONENTS AND RATES (Cont'd)

ORIGINAL

9.2.3 CHANNEL OPTIONS (Cont'd)

C. SIGNALING CAPABILITY (Cont'd)

4. Two-Point Automatic Ringdown Signaling Arrangements Loop Closure Interface

In this signaling arrangement, the calling station activates 20 Hertz ringing by providing a tip to ring conductor short as an off-hook signal. The 20 Hertz ringing operates a bell or relay at the distant station. Loop Closure interface is used for handset, key set, switchboard and console terminations.

5. Manual Signaling Arrangements for Two-Point or Multipoint Services 20 Hertz Interface

In this signaling arrangement, the calling station transmits 20 Hertz ringing activated by the operation of a key or a button. The 20 Hertz ringing activates a bell or relay at the distant station. In the multipoint application, all stations receive the ring from the calling location.

6. Manual Signaling Arrangement with Code Selection for Multipoint Services

This signaling arrangement is similar to the Manual Signaling Arrangement for Two-Point Services except that the calling station can select a single distant station or group of stations by keying one of nine predetermined codes. Only the station or stations called will respond to the ringing current.

7. Loop Reverse Battery

This signaling arrangement changes the signaling state when the battery and ground on the tip and ring are reversed. This arrangement is typically used on PBX and Centrex tie trunks.

8. Signal Range Extension

Signal Range Extension is required when a private line service (arranged for loop start dial signaling) is used as an off-premises station. There are three types:

- Type A is furnished for use with Class A PBX (or similar) station ports capable of operation over loops with resistance in the range of 0-199 ohms.
- Type B is furnished for use with Class B PBX (or similar) station ports capable of operation over loops with resistance in the range of 200-899 ohms.
- Type C is furnished for use with Class C PBX (or similar) station ports capable of operation over loops with resistance in the range of 900 ohms or more.

ADMINISTRATIVELY
APPROVED FOR FILING

9. ACCUNET® SPECTRUM OF DIGITAL SERVICES (ASDS)-INTEROFFICE

9.2 SERVICE COMPONENTS AND RATES (Cont'd)

ORIGINAL

9.2.3 CHANNEL OPTIONS (Cont'd)

D. CONDITIONING

Conditioning provides more specific transmission characteristics for ASDS connected to voice grade access or to appropriate office functions. The following types of conditioning apply to end-to-end services using voice grade access. The conditioning parameters stated are based on the assumption that the access will meet the conditioning parameters set forth in the Local Exchange Companies' access service tariffs.

1. Data Conditioning

There are two types of data conditioning: C-Type and D-Type. C-Type conditioning controls attenuation distortion and envelope delay distortion; D-Type conditioning controls the signal to C-notched noise ratio and intermodulation distortion and, for D-6 conditioning, also controls phase jitter, attenuation distortion and envelope delay distortion. C-Type and D-Type conditioning may be combined on the same channel.

(a) C-Type Conditioning

C-Type conditioning is for the additional control of attenuation distortion and envelope delay distortion. The parameters for C-Type conditioning are described in Technical Publication-PUB 43202. Only one kind of C-Type conditioning may be applied to an ASDS.

I. C-1 Conditioning

The attenuation distortion and envelope delay distortion parameters for C-1 conditioning are:

Attenuation Distortion
(1004 Hz Reference)

Frequency Range (Hz)	Variation (dB)
1004-2404	-1 to +3
304-2704	-2 to +6
2704-3004	-3 to +12

Envelope Delay Distortion

Frequency Range (Hz)	Variation (dB)
1004-2404	1000
804-2604	1750

ADMINISTRATIVELY
APPROVED FOR FILING

9. ACCUNET® SPECTRUM OF DIGITAL SERVICES (ASDS)-INTEROFFICE

9.2 SERVICE COMPONENTS AND RATES (Cont'd)

ORIGINAL

9.2.3 CHANNEL OPTIONS (Cont'd)

D. CONDITIONING (Cont'd)

	USOC	MONTHLY RATE
- per IOC		
- two-point channel not arranged for switching	P2W	NONE
- multipoint channel not arranged for switching	PH7	NONE
- two-point arranged for switching at an AT&T Central Office	P2X	NONE

II. C-2 Conditioning

The attenuation distortion and envelope delay distortion parameters for C-2 conditioning are:

Attenuation Distortion
(1004 Hz Reference)

Frequency Range (Hz)	Variation (dB)
504-2804	-1 to +3
304-3004	-2 to +6

Envelope Delay Distortion

Frequency Range (Hz)	Variation (dB)
1004-2604	500
604-2604	1500
504-2804	3000

	USOC	MONTHLY RATE
- per IOC		
- two-point channel not arranged for switching	P3H	NONE
- multipoint channel not arranged for switching	P3W	NONE
- two-point channel arranged for switching at an AT&T Central Office	P3J	NONE

ADMINISTRATIVELY
APPROVED FOR FILING

9. ACCUNET® SPECTRUM OF DIGITAL SERVICES (ASDS)-INTEROFFICE

ORIGINAL

9.2 SERVICE COMPONENTS AND RATES (Cont'd)

9.2.3 CHANNEL OPTIONS (Cont'd)

D. CONDITIONING (Cont'd)

III. C-4 Conditioning

This conditioning is for two-point channel or multipoint channels having not more than four Customer's premises. The attenuation distortion and envelope delay distortion parameters for C-4 conditioning are:

Attenuation Distortion
(1004 Hz Reference)

Frequency Range (Hz)	Variation (dB)
504-3004	-2 to +3
304-3204	-2 to +6

Envelope Delay Distortion

Frequency Range (Hz)	Variation (dB)
1004-2604	300
804-2804	500
604-3004	1500
504-3004	3000

	USOC	MONTHLY RATE
- per IOC - multipoint channels consisting of not more than 4 AT&T customer premises	P4V	NONE

(b) D-Type Conditioning

D-Type conditioning is for the control of signal to C-notched noise ratio and intermodulation distortion. In addition, D-6 conditioning controls phase jitter, attenuation distortion and envelope delay distortion. The signal to C-notched noise ratio, intermodulation distortion, phase jitter, attenuation distortion and envelope delay distortion parameters for D-Type conditioning is described in Technical Publication - PUB 43202 (see Preface) and are as follows:

	D1, D2	D6
Signal to C-Notched noise ratio	28dB	32dB
Intermediations distortion:		
-Signal to second order modulation products	35dB	45dB
-Signal to third order modulation products	40dB	46dB
Phase jitter (20-300Hz)	N/A	Less than or equal to 7 degrees peak to peak
Attenuation distortion (404-2804Hz)	N/A	Variation -1 to +4.5dB
Envelope delay distortion (604-2804Hz)	N/A	Variation 1400mcs

ADMINISTRATIVELY
APPROVED FOR FILING

9. ACCUNET® SPECTRUM OF DIGITAL SERVICES (ASDS)-INTEROFFICE

9.2 SERVICE COMPONENTS AND RATES (Cont'd)

ORIGINAL

9.2.3 CHANNEL OPTIONS (Cont'd)

D. CONDITIONING (Cont'd)

When D-Type conditioning is installed subsequent to the start of theservice to which it applies, a charge equal to the installation charge of the service itself will apply in addition to the installation charge for the D-conditioning.

	USOC
	NRZDT

When a service equipped with D-Type conditioning is used for voice communications, the quality of the voice transmission may not be satisfactory.

I. D-1 Conditioning

This conditioning is for services not arranged for switching and for services arranged for through switching

	USOC	MONTHLY RATE
- per IOC	QHA	NONE

II . D-2 Conditioning

This conditioning is for two-point channels arranged for switching at an AT&T Central Office.

	USOC	MONTHLY RATE
- per IOC	QHB	NONE

III. D-5 Conditioning

This conditioning is for polled multipoint data services not arranged for switching.

	USOC	MONTHLY RATE
- per IOC	QHE	NONE

IV. D-6 Conditioning

This conditioning is for two-point services not arranged for switching. Local channels or other access connected to an IOC equipped for D-6 conditioning must meet the parameters stated for C-1 and D-1 conditioning.

USOC	MAXIMUM[1] NONRECURRING CHARGE
QHED6	$ 810.70

NOTE 1: See Price List for current rates.

ADMINISTRATIVELY
APPROVED FOR FILING

9. ACCUNET® SPECTRUM OF DIGITAL SERVICES (ASDS)-INTEROFFICE

9.2 SERVICE COMPONENTS AND RATES (Cont'd)

ORIGINAL

9.2.3 CHANNEL OPTIONS (Cont'd)

D. CONDITIONING (Cont'd)

2. Tone Control Conditioning

Tone control conditioning adapts a service for operation and tone signal control. Tone control conditioning and Service Type 3 parameters are required for remote control services for radiotelephone. Tone control conditioning and Service Type 5 parameters are required for remote metering services when those services are used for tone signal control.

USOC	MONTHLY RATE
GN3++	NONE

E. CUSTOMER REQUESTED ECHO CONTROL

Echo control provides a Customer with the capability to minimize echo effects on IOCs in voice network with extensive channel mileages. Echo control will be furnished as required on IOCs. When a Customer requires echo control on IOC whose parameters do not require it to be equipped with echo control, it will be provided at a charge. A Customer may also request that echo control not be provided on an IOC which normally would be equipped with echo control to meet its design objectives. No credit will be given for echo control not provided.

	USOC	MAXIMUM PER IOC[1] MONTHLY	MAXIMUM PER IOC[1] NONRECURRING CHARGE
- per IOC			
- when installed at the same time as the IOC	EKOSF	$32.73	NONE
- when installed subsequently	EKOSA	$32.73	$95.98

NOTE 1: See Price List for current rates.

ADMINISTRATIVELY
APPROVED FOR FILING

9. ACCUNET® SPECTRUM OF DIGITAL SERVICES (ASDS)-INTEROFFICE

ORIGINAL

9.2 SERVICE COMPONENTS AND RATES (Cont'd)

9.2.4 OFFICE FUNCTIONS

A. ASDS SWITCH PORT

This office function provides electronic cross connection of DS0 Channels to provide Customer Controlled Reconfiguration as follows:

When the Customer uses DS1 access to an ASDS Central Office to connect to ASDS, Customer Controlled Reconfiguration of a DS1 Switch Port is required.

1. Customer Controlled Reconfiguration

Customer Controlled Reconfiguration permits the Customer to electronically rearrange DS0 channels between all of a Customer's ASDS channels terminating in the same AT&T central office. Customer Controlled Reconfiguration requires one ASDS Switch Port for each of the office connections. In addition, Customer Controlled Reconfiguration requires Customer-provided terminal equipment and private line service or a dial-up service to send the Customer's instructions to the network control center. If the customer elects to use dial-up services to access the network control center, an AT&T 800 Service or its equivalent is required to provide secure dial-back capability. The network control center then automatically provides the Customer with switching control and status reports.

An office connection is required for each ASDS channel connected to an ASDS Switch Port. Additional details are provided in Technical Publication-PUB 54015 (see Technical Publication Information, Preface).

	SPEED	USOC	MAXIMUM MONTHLY RATE[1]	MAXIMUM NONRECURRING RATE[1]
- per ASDS Switch Port	56/64 kbps	CURCR	$ 33.00	$ 24.20
	128 kbps	CURCR	66.00	37.20
	256 kbps	CURCR	121.00	47.30
	384 kbps	CURCR	176.00	70.40
	512 kbps	CURCR	231.00	94.60
	768 kbps	CURCR	308.00	141.90

NOTE 1: See Price List for current rates.

ADMINISTRATIVELY
APPROVED FOR FILING

9. ACCUNET® SPECTRUM OF DIGITAL SERVICES (ASDS)-INTEROFFICE

9.2 SERVICE COMPONENTS AND RATES (Cont'd)

ORIGINAL

9.2.4 OFFICE FUNCTIONS

B. TRANSFER ARRANGEMENTS

Transfer arrangements permit a Customer to transfer one channel to another or one service to another. They also enable a service to be used for alternate purposes, non-simultaneously, e.g., for voice or data transmission. Transfer Arrangements are restricted to ASDS applications utilizing Analog Voice Grade Private Line access. Transfer arrangements are provided at AT&T central offices. They may be key-activated or controlled by the 1 X N Control Arrangements as specified in 12.2.1 preceding. Key activated arrangements require a key and a control channel. The control channel and keys are provided by the Customer.

Each channel connected to a transfer arrangement requires an office connection.

1. Private Line Service Transfer Arrangement

This arrangement enables the Customer to interconnect two private line services in two different modes of operation non-simultaneously. The two private line services must share a common transfer arrangement and must be compatible operationally. The services may be two-point or multipoint. This arrangement may be used to connect more than two services in tandem, but AT&T will not support a tandem connection of services using more than three transfer arrangements and four or more services.

In a typical application, the IOCs of two private line services are connected, creating one private line service or, alternately, the two services function independently. The Local Channel or other access connected to the IOC(s) may remain connected or be disconnected at the Customer's option. One control channel is required for a key-activated arrangement.

	USOC	MAXIMUM[1] MONTHLY RATE
- per termination	XTAOC	$ 32.45

NOTE 1: See Price List for current rates.

ADMINISTRATIVELY
APPROVED FOR FILING

9. ACCUNET® SPECTRUM OF DIGITAL SERVICES (ASDS)-INTEROFFICE

9.2 SERVICE COMPONENTS AND RATES (Cont'd)

ORIGINAL

9.2.4 OFFICE FUNCTIONS

B. TRANSFER ARRANGEMENTS (Cont'd)

2. Voice Grade Local Channel or Other Access Transfer Arrangements

(a) Transfer Arrangement with Alternate Disconnect

This arrangement permits the Customer to connect two Voice Grade Local Channels or other analog access to one IOC in two different modes of operation non-simultaneously. All channels must share a common transfer arrangement.

In each mode of operation, one of the two Voice Grade Local Channels or other analog access is connected and the other is disconnected. Variations of this arrangement are described following. One control channel is required for a key-activated arrangement.

	USOC	MAXIMUM[1] MONTHLY RATE
- per arrangement	XTAAC	$ 26.95

(b) Transfer Arrangement Without Alternate Disconnect

This arrangement operates in the same way as in (a) preceding except that the alternate Voice Grade Local Channel or other analog access does not disconnect. One control channel is required for a key-activated arrangement.

	USOC	MAXIMUM[1] MONTHLY RATE	MAXIMUM[1] NONRECURRING CHARGE
- per arrangement	XTAWD	$26.95	$57.75

NOTE 1: See Price List for current rates.

ADMINISTRATIVELY
APPROVED FOR FILING

9. ACCUNET® SPECTRUM OF DIGITAL SERVICES (ASDS)-INTEROFFICE

9.2 SERVICE COMPONENTS AND RATES (Cont'd)

ORIGINAL

9.2.4 OFFICE FUNCTIONS

B. TRANSFER ARRANGEMENTS (Cont'd)

(c) Transfer Arrangement with Alternate Disconnect and Busytone

This arrangement is the same as (a) preceding, but with a busytone indication for the disconnected Voice Grade Local Channel or other analog access. One control channel is required for a key-activated arrangement.

	USOC	MAXIMUM[1] MONTHLY RATE
- per arrangement	XTAAB	$ 26.95

(d) Transfer Arrangement with Alternate Disconnect and Intercept

This arrangement is the same as (a) preceding, but with intercept for the disconnected channel. One control channel is required for each arrangement. This arrangement is primarily used for alternate private line/foreign exchange service. In such application, two rrangements are used, one at each end of the IOC. One control channel is required for a key-activated arrangement.

	USOC	MAXIMUM[1] MONTHLY RATE	MAXIMUM[1] NONRECURRING CHARGE
- per arrangement	36B	$32.45	$ 9.68

(e) Exclusion Arrangement

This arrangement permits the customer to disconnect and reconnect one or more Interoffice Channels, Voice Grade Local Channels or other analog access from a private line service. One control channel is required for a key activated arrangement.

	USOC	MAXIMUM[1] MONTHLY RATE
- per arrangement	XTAEX	$ 26.95

3. 1 X N Channel Switch

This arrangement permits one or more Interoffice Channels, Voice Grade Local Channels or other analog access (primary channels) to be switched to one or more Interoffice Channels, Voice Grade Local Channels or other analog access (standby channels). This transfer arrangement consists of one or more basic assembly units, known as nests, each of which accommodates up to 20 channel cards. Each channel card performs the switching function for one primary channel.

NOTE 1: See Price List for current rates.

ADMINISTRATIVELY
APPROVED FOR FILING

9. ACCUNET® SPECTRUM OF DIGITAL SERVICES (ASDS)-INTEROFFICE

9.2 SERVICE COMPONENTS AND RATES (Cont'd)

ORIGINAL

9.2.4 OFFICE FUNCTIONS

B. TRANSFER ARRANGEMENTS (Cont'd)

A separately obtained control arrangement(s) (1 X N Control Arrangement,as described ~~in~~ Section 12.2.1 of this tariff, or equivalent) is required to control the channel cards. The Customer of the separately obtained control arrangement is responsible for operation of the 1 X N Channel Switch.

Multiple primary channels, belonging to one or more Customers, may be arranged for switching to a common standby channel. In this case, AT&T assumes no liability for damages or for credit allowance for interruption if the standby channel is not available for one Customer while activated for another.

	USOC	MAXIMUM[1] MONTHLY RATE	MAXIMUM[1] NONRECURRING CHARGE
- per nest (capacity - 20 channel cards)	3DYXN	$149.60	$149.60
- per channel card (capacity - one switching function)	3DYCC	$24.20	NONE

NOTE 1: See Price List for current rates.

ADMINISTRATIVELY
APPROVED FOR FILING

9. ACCUNET® SPECTRUM OF DIGITAL SERVICES (ASDS)-INTEROFFICE

ORIGINAL

9.2 SERVICE COMPONENTS AND RATES (Cont'd)

9.2.5 ANALOG MULTIPOINT CHARGE

An Analog Multipoint Charge applies to ACCUNET Spectrum of Digital Services consisting of three or more analog Customer premises. The charge applies for each analog Customer premises termination on a two- point or multipoint voice grade local channel service for which the Access Coordination Function (ACF) is provided by AT&T. The monthly charge is in addition to the ACF charge.

	USOC	MAXIMUM[1] MONTHLY RATE
- per termination	MPC	$ 3.30

NOTE 1: See Price List for current rates.

ADMINISTRATIVELY
APPROVED FOR FILING

ORIGINAL

10. DATAPHONE® DIGITAL SERVICE*-INTEROFFICE

10.1 GENERAL

A DATAPHONE Digital Service is suitable for the simultaneous two-way transmission of data at synchronous speeds of 9.6 kbps.

10.1.1 DESCRIPTION

DATAPHONE Digital Services are configured by combining components to connect customer locations within the State of Arizona. DATAPHONE Digital Services are also provided between AT&T Central Offices and points of connection. DATAPHONE Digital Services may be two-point or multipoint. ACC Business, a non-AT&T branded division, is introducing intrastate private line products. All terms and conditions, rates and charges are identical to the existing AT&T DATAPHONE Digital Services offered in this tariff.

10.1.2 REGULATIONS

In addition to the regulations in Section 2, preceding, the following apply.

A. AVAILABILITY OF DATAPHONE DIGITAL SERVICE

DATAPHONE Digital Services are available from the AT&T Business Services Guide. DATAPHONE Digital Services may not be available in every LATA or to all rate center areas within a LATA and is dependent on the availability of suitable access.

B. CREDIT ALLOWANCES FOR INTERRUPTIONS

Credit allowances for interruption of service will be applied in accordance with the regulations as set forth in Section 2.4.6, General Regulations, preceding.

C. CONNECTION TO OTHER SERVICES

When a DATAPHONE Digital Service is connected to other services as indicated in the following, the design objective applies only to the DATAPHONE Digital Service.

1. Voice Grade Services

A Voice Grade Service used for the transmission of analog data at 9.6 kbps may be connected to a DATAPHONE Digital Service through a Voice Grade Analog/Digital Converter as shown in Section 12.2.4 following. The appropriate office connections are also required.

* DATAPHONE Digital Services may no longer be ordered for new Customers or for additional orders received from existing Customers after September 15, 2003. DATAPHONE Digital Services in place or on order before September 15, 2003 will remain in effect until discontinued or canceled by the Customer.

ADMINISTRATIVELY
APPROVED FOR FILING

10. DATAPHONE® DIGITAL SERVICE-INTEROFFICE

ORIGINAL

10.1 GENERAL

10.1.2 REGULATIONS (Cont'd)

C. CONNECTION TO OTHER SERVICES (Cont'd)

2. Switched Digital Service

A DATAPHONE Digital Service used for the transmission of data at 9.6 kbps may be connected to a Switched Digital Service. The appropriate office connection is also required.

10.1.3 MINIMUM PAYMENT PERIOD

Except as noted in 10.1.6 following, the minimum payment period for DATAPHONE Digital Service components is one month. Applications and exceptions to this regulation are shown in Section 2.4.3, preceding (Minimum Service Period and Fractional Rates and Charges).

10.1.4 NOTICE OF DISCONTINUANCE

The Notice of Discontinuance for all DATAPHONE Digital Service components is 15 days. Recurring charges apply for a period of 15 days from the date AT&T receives the discontinuance notice or until the requested discontinuance date, whichever is longer. The charges will continue to apply whether or not the Customer continues to use the service.

10.1.5 APPLICATION FOR SERVICE CANCELED

As specified in Section 2.4.4, a cancellation charge will apply, per component, for service orders canceled by the Customer on or after the SID.

Cancellation Charge Schedule

CRITICAL DATES	MAXIMUM INTER-OFFICE CHANNEL RATE	USOC	MAXIMUM OFFICE CONNECTION RATE	USOC
APP	0	NRZCN	0	NRZCN
SID	$ 42.00		$ 30.06	
DLRD	50.40		34.07	
RID	108.00		46.09	
WOT	156.00		108.14	
CTA	240.00		200.40	
DD	240.00		200.40	

NOTE 1: See Price List for current rates.

ADMINISTRATIVELY
APPROVED FOR FILING

10. DATAPHONE® DIGITAL SERVICE-INTEROFFICE

ORIGINAL

10.1 GENERAL

10.1.5 APPLICATION FOR SERVICE CANCELED (Cont'd)

The ancillary charge is based on the last schedule critical date reached in the service order process. For example, for a 9.6 kbps order involving an IOC and two office connections which is canceled after the SID but prior to the DLRD, a total charge of $87.10 will apply, consisting of $35.00 for the IOC and $25.05 for each of the two office connections.

10.1.6 FIXED DISCOUNT RATE PLAN

One, two, three, four and five year fixed discount rate plans are available as alternatives to conventional monthly rates for the IOC component of DATAPHONE® Digital Service. In exchange for a time commitment to an IOC, the customer is given a percentage discount off the monthly rate. Under the fixed discount rate plan, the percentage discount will be fixed throughout the commitment period. If the rates under the monthly rate plan change during the commitment period, the discount will be applied to the total revenue calculated at the effective date.

A. DISCONTINUANCE OF A FIXED DISCOUNT RATE PLAN-WITHOUT LIABILITY

The Customer may discontinue a DATAPHONE Digital Service IOC furnished under a fixed discount rate plan prior to the expiration of the applicable term, without liability, under the following conditions:

1. If the Customer enters a new agreement before the applicable term expires and the expiration date of the new plan is on or after the expiration date of the unexpired plan.

2. If the Customer elects to subscribe to an AT&T digital service between the same points as the DATAPHONE Digital Service at a higher transmission speed (e.g., ACCUNET T1.5) and under a new fixed discount rate plan. The expiration date of the new plan must be on or after the expiration date of the unexpired term.

3. The Customer enters into a replacement plan for other AT&T services which has an equal or greater revenue commitment, provided the expiration date of the new plan is on or after the expiration date of the unexpired plan.

4. If tariff revisions increase the applicable fixed rate before the applicable term expires and the Customer notifies AT&T in writing within 30 days of the effective date of the increased rates that they wish to discontinue the plan.

ADMINISTRATIVELY
APPROVED FOR FILING

10. DATAPHONE® DIGITAL SERVICE-INTEROFFICE

ORIGINAL

10.1 GENERAL

10.1.6 FIXED DISCOUNT RATE PLAN (Cont'd)

B. DISCONTINUANCE OF A FIXED DISCOUNT RATE PLAN-WITH LIABILITY

Discontinuance of a service furnished under a fixed discount rate plan for reasons other than those stated in 10.1.6.A. above, prior to the expiration of the applicable term, will result in Customer liability as specified below:

1. For service discontinued prior to the completion of the first year of service, the Customer is liable for 100 percent of the total monthly charges for the unexpired portion of the first year of service plus 50 percent of the total monthly charges for the remaining portion of the applicable term.

2. For service discontinued after the completion of the first year of service and more than one month prior to the expiration date of the fixed discount rate plan, the Customer is liable for 50 percent of the total monthly charges for the unexpired portion of the applicable term. For service discontinued within one month of the expiration date of the fixed discount rate plan, Notice of Discontinuance provisions as specified in 10.1.4, preceding apply.

   Payment of the total amounts owed by the Customer under this regulation are due within thirty days of the date serve is discontinued.

C. EXPIRATION AND RENEWAL OF A FIXED DISCOUNT RATE PLAN

Upon expiration of a fixed discount rate plan, the Customer has the option to obtain the same service under a new fixed discount rate plan, if available, or to obtain service under the monthly rate plan.

The Customer may renew service under a new fixed discount rate by notifying AT&T, in writing, anytime prior to the expiration of the current fixed discount rate plan.

To continue the same service under monthly rates, no action is required on the part of the Customer. Upon expiration of a fixed discount rate plan, and unless notification to the contrary is received, the Customer's service will automatically be continued at rates specified under the monthly rate plan in effect at that time. In this case, the Customer will be considered to have satisfied the three-month minimum period.

Notice of Discontinuance provisions, as specified in 10.1.4, preceding, apply if the Customer elects not to renew service.

ADMINISTRATIVELY
APPROVED FOR FILING

10. DATAPHONE® DIGITAL SERVICE-INTEROFFICE

ORIGINAL

10.2 SERVICE COMPONENTS AND RATES

The components of a DATAPHONE Digital Service are:

10.2.1 INTEROFFICE CHANNEL

An Interoffice channel is a channel between two AT&T central offices, points of connection or a combination thereof. It is available at transmission speeds of 9.6 kbps or 56 kbps. When an Interoffice channel connects to access, access multiplexing is required. AT&T furnishes Digital Access Multiplexing under Local Channel Services Schedule 11.

Conventional monthly rates and a fixed discount rate plan are available.

A. MONTHLY RATE PLAN

The rates for an IOC are listed by transmission speed. The monthly charge is mileage sensitive and includes two rates. A fixed rate applies to the channel itself, and a mileage rate applies to each airline mile of the IOC.

1.

MAXIMUM MONTHLY CHARGES PER CHANNEL

6 kbps leage Band	OC NVX	FIXED	PER MILE
50		$ 57.20	$ 1.98
-100		91.92	1.26
er 100		97.98	1.20

2.

kbps leage Band	OC NVX		
50		$312.00	$ 6.00
-100		372.00	4.80
er 100		462.00	3.90

B. FIXED DISCOUNT RATE PLAN

Term Commitment	Discount
1 year	4%
2 years	6%
3 years	8%
4 years	10%
5 years	12%

NOTE 1: See Price List for current rates.

ADMINISTRATIVELY
APPROVED FOR FILING

10. DATAPHONE® DIGITAL SERVICE-INTEROFFICE

ORIGINAL

10.2 SERVICE COMPONENTS AND RATES

10.2.1 INTEROFFICE CHANNEL (Cont'd)

C. CALCULATION OF CHARGES

To calculate the monthly recurring charge for an IOC, first determine the airline mileage between AT&T Central Offices (see Calculation of Airline Mileage, section 4.1.2 preceding). Using the appropriate IOC rate which corresponds to the transmission speed of service, multiply the total calculated airline miles by the mileage rate shown for that airline mileage. To this figure add the corresponding fixed rate shown for that airline mileage band. The sum of the mileage rate and the fixed rate is the monthly charge for the IOC.

Example 1 (Monthly Plan):

A two-point 9.6 kbps service with an IOC airline mileage of 273.

Using the 9.6 IOC rate:

273 miles x the per Mile Rate ($1.00)	= $273.00
Add the Fixed Rate ($81.65)	+ $ 81.65
Total Monthly Charge	= $354.65

Example 2 (Fixed Discount Rate Plan):

The IOC airline mileage for a 9.6 kbps circuit is 273 miles for a service provided under a five year fixed discount rate plan.

273 X Mileage Rate ($1.00)	= $273.00
Add the Fixed Rate ($81.65)	= 81.65
Total Monthly Charge	= $354.65

The total non-discounted monthly charge for the 9.6 kbps circuit is $354.65. The Fixed Discount Rate Plan discount of 12% is applied to the total monthly charge.

Total Monthly Charge =	$354.65
Discount ($354.65 X 12%) =	- 42.56
Monthly Charge after Discount =	$312.09

ADMINISTRATIVELY
APPROVED FOR FILING

10. DATAPHONE® DIGITAL SERVICE-INTEROFFICE

ORIGINAL

10.2 SERVICE COMPONENTS AND RATES

10.2.2 OFFICE CONNECTIONS

A. ACCESS CONNECTION

An access connection provides the function, at an AT&T central office of connecting Local Channels obtained from Local Channel Services Tariff 11 or other access, to an IOC, office function, another Local Channel, or other access. One access connection applies for each Local Channel or other access connected.

-Per access connection	USOC	MAXIMUM MONTHLY RATE	MAXIMUM INSTALLATION CHARGE
9.6 kbps	041AC	$25.56	$240.00
56 kbps	041AC	$63.90	$302.40

B. FUNCTION CONNECTION

A function connection provides the function, at an AT&T central office, of connecting an office function to an IOC or another office function.

-Per function connection	USOC	MAXIMUM INSTALLATION CHARGE
9.6 kbps	NRZFC	$240.00
56 kbps	NRZFC	$302.40

NOTE 1: See Price List for current rates.

ADMINISTRATIVELY
APPROVED FOR FILING

ORIGINAL

10. DATAPHONE® DIGITAL SERVICE-INTEROFFICE

10.2 SERVICE COMPONENTS AND RATES

10.2.3 CHANNEL OPTIONS

Channel options are features added to a service to change or augment its transmission characteristics.

A. SPECIAL ROUTING OF A DATAPHONE DIGITAL SERVICE

A DATAPHONE Digital Service is normally furnished using a channel selected by AT&T. However, special routing options are available where the required service components are available. If complete Special Routing is not available when ordered, or if it becomes unavailable at a later date due to network rearrangements, Special Routing may only be furnished on a partial basis. The Customer will be advised before partial Special Routing is provided and may cancel or discontinue the special routing if the partial Special Routing is not acceptable. No cancellation charge will apply in such case. Diversity is the only special routing option for DATAPHONE Digital Services. It is available only for 56 kbps services.

1. Diversity

Two or more DATAPHONE Digital Services are furnished partially or entirely over not more than two separate digroups. Diversity is furnished for any portion of the channel components or all channel components. If there are more than two services, the services are divided into two groups and furnished partially or entirely over two separate digroups. Where possible, diversity will be furnished partially or entirely over separate transmission paths.

Example 1: The Customer has four IOCs between AT&T Central Offices A and B and specifies that IOC No. 1 be diverse from IOC No. 2. Special Routing charges will apply to IOC Nos. 1 and 2. Special Routing charges will not apply to IOC Nos. 3 and 4.

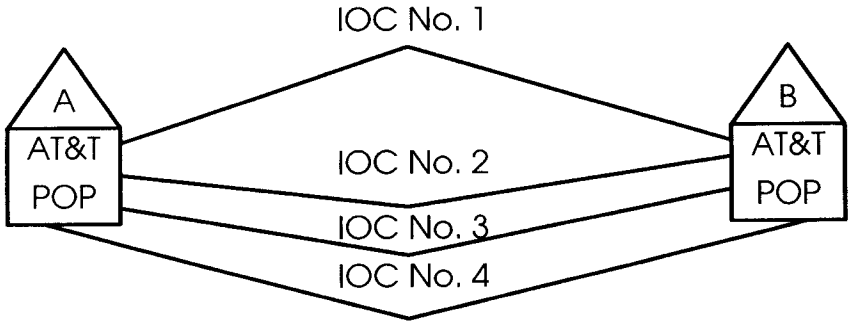

ADMINISTRATIVELY
APPROVED FOR FILING

10. DATAPHONE® DIGITAL SERVICE-INTEROFFICE

ORIGINAL

10.2 SERVICE COMPONENTS AND RATES

10.2.3 CHANNEL OPTIONS (Cont'd)

A. SPECIAL ROUTING OF A DATAPHONE DIGITAL SERVICE (Cont'd)

Example 2: The Customer has 4 IOCs between AT&T Central Offices A and B and specifies that IOC Nos. 1 and 2 be diverse from IOC Nos. 3 and 4. Four Special Routing Charges apply.

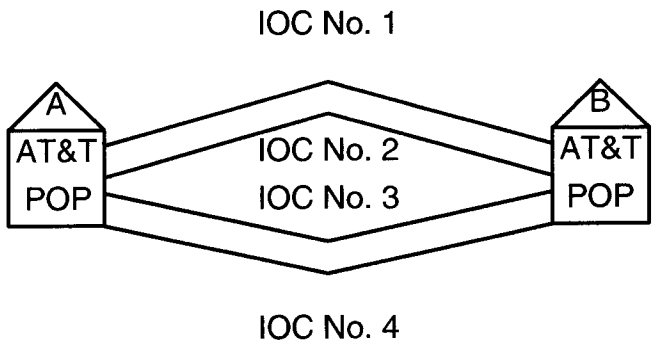

(a) 56 kbps Service Diversity

	USOC	MAXIMUM MONTHLY RATE	MAXIMUM INSTALLATION CHARGE
- Per IOC	DY7D5	$127.20	$244.80

(b) Diversity From Other Types of Services

	USOC	MAXIMUM MONTHLY RATE	MAXIMUM INSTALLATION CHARGE
- Per IOC	DY7O5	$127.20	$244.80

NOTE 1: See Price List for current rates.

ADMINISTRATIVELY
APPROVED FOR FILING

10. DATAPHONE® DIGITAL SERVICE-INTEROFFICE

ORIGINAL

10.2 SERVICE COMPONENTS AND RATES

10.2.4 OFFICE FUNCTIONS

A. SUBRATE DATA MULTIPLEXING (SDM)

The SDM office function permits the derivation of up to 20 subrate digital data channels from a 56 kbps Interoffice Channel (see 10.2.1.A. preceding), from a 56 kbps Digital Data Local Channel equipped with the Secondary Channel Option available Local Channel Services Schedule 11, other access, or from a channel derived from an M-24 Multiplexing Office Function (see ACCUNET® T1.5 service, Section 7, preceding).

Customer-provided multiplexing equipment and access used in conjunction with an SDM office function must transmit a DS-0 signal formatted as described in Technical Publication 54075 (see Technical Publication Information).

SDM is available as follows:
SDM 5 - derives up to 5 subrate digital data channels at a maximum rate of 9.6 kbps on any channel.

As shown, when a 56 kbps Interoffice Channel or a 56 kbps Local Channel equipped with the Secondary Channel Option is used to connect to this office function, the maximum data transfer rate available is 48 kbps. One office connection is required for each digital data channel connected to this office function. A throughput option is required for each derived channel.

	USOC	MAXIMUM MONTHLY RATE
- Per Multiplexing Office function		
SDM 5	SDO05	$184.80

NOTE 1: See Price List for current rates.

ADMINISTRATIVELY
APPROVED FOR FILING

10. DATAPHONE® DIGITAL SERVICE-INTEROFFICE

ORIGINAL

10.2 SERVICE COMPONENTS AND RATES

10.2.4 OFFICE FUNCTIONS (Cont'd)

B. MULTI-SERVICE OFFICE FUNCTIONS

1. Analog/Digital Converter

An Analog/Digital Converter as shown in Section 15, following, is required for the connection of a Private Line Analog data service, at an AT&T Central Office, to DATAPHONE Digital Service.

2. Transfer and Switching Arrangement

A transfer and switching arrangement is provided at an AT&T Central Office to permit:

(a) The transfer of a spare channel to any one of many local channels (one arrangement is required for each local channel to be so connected).

(b) The transfer of a spare local channel to any one of many channels (one arrangement is required for each local channel to be so connected).

(c) The transfer of a spare local channel to any one of many local channels (one arrangement is required for each local channel to be so connected).

(d) The connection of a channel to one of many other channels, operating at the same speed to form a through connection when such an arrangement is necessary to meet the Customer's communications requirement (a minimum of two arrangements are required, one for each channel to be connected).

The arrangement requires the use of but does not include a 1 X N control arrangement, as shown in Section 15 following, to operate the transfer and switching functions.

	Monthly Rate	USOC
- Per arrangement	$39.20	DTRTA

3. Network Multiplexing Arrangement

This arrangement provides the capability to derive up to 20 Voice Grade analog channels from a single 56 kbps digital Interoffice Channel (IOC) as shown in Section 15 following.

NOTE 1: See Price List for current rates.

ADMINISTRATIVELY
APPROVED FOR FILING

ORIGINAL

11. SONET SERVICES-INTEROFFICE

11.1 GENERAL

The AT&T Private Line Interoffice Channel SONET Services provide for the transmission of various digital signals.

11.1.1 DESCRIPTION

These AT&T Private Line Interoffice Channel SONET Services are configured by combining service components at designated AT&T Central Offices. The AT&T Central Offices may be within the same LATA or may be in different LATAs. AT&T Private Line SONET Interoffice Channels are furnished on a two-point basis only.

Signals at the AT&T Central Office - All signals carried by local channels or other access and presented to the AT&T central offices must meet certain signal and format constraints. These constraints are described in the following Technical Publications:

TR 54018 - OC3 - Optical Interface Specifications
TR-NWT-000253 - Synchronous Optical Network Transport Systems (Bellcore)
TR 54077 - OC12- Optical Interface Specifications
GR-253-CORE - Synchronous Optical Network Transport Systems (Bellcore)

11.1.2 REGULATIONS

In addition to the Regulations in Section 2, preceding, the following apply.

A. AVAILABILITY

These Services are available from the designated AT&T central offices listed in AT&T's Service Guides and may not be available in every LATA.

B. CREDIT ALLOWANCES FOR INTERRUPTIONS

For purposes of determining credit allowances in accordance with the regulations in Section 2.4.6 preceding, a Service is considered to be interrupted when:

- there has been a loss of continuity, or
- 300 or more seconds of transmission containing errors occur in a 15-minute period on an OC3 level, or
- there are more than 60 SES in a 15-minute period on an OC12 level.

ADMINISTRATIVELY
APPROVED FOR FILING

11. SONET SERVICES-INTEROFFICE

ORIGINAL

11.1 GENERAL (Cont'd)

11.1.2 REGULATIONS (Cont'd)

C. CONNECTION TO OTHER SERVICES

Other access at various speeds may be connected to AT&T Central Office.

11.1.3 NOTICE OF DISCONTINUANCE

The Notice of Discontinuance for all AT&T Private Line SONET Service components is one month. Recurring charges will apply for a period of one month from the date AT&T receives the discontinuance notice or until the requested discontinuance date, whichever period is longer. These charges will apply during this period whether or not the Customer continues to use the service.

11.1.4 CANCELLATION CHARGE

As specified in Section 7.1.3 preceding, a cancellation charge will apply, per component, for service orders canceled by the Customer on or after the SID.

Cancellation Charge Schedule -

Interoffice Channel (IOC)
Office Connection (OC)

(See Price List for current rates)

The applicable charge is based on the last scheduled critical date reached in the service order process.

ADMINISTRATIVELY
APPROVED FOR FILING

ORIGINAL

11. SONET SERVICES-INTEROFFICE

11.2 SERVICE COMPONENTS AND RATES

The components of AT&T Private Line SONET Service are Interoffice Channels and Office Connections.

11.2.1 INTEROFFICE CHANNEL

An Interoffice Channel is a channel between two AT&T central offices, points of connection, or a combination thereof, on AT&T's digital fiber optic network.

A. RATES

(See Price List for current rates.)

B. TERMINATION CHARGE

A termination charge will apply if the customer terminates service prior to the end of the term specified.

11.2.2 OFFICE CONNECTIONS

A. ACCESS CONNECTION

An Access Connection provides the function, at an AT&T central office, of connecting ACCU-Ring Network Access Service or other access to an IOC. One access connection applies for each other access connected.

(See Price List for current rates.)

Installation charges do not apply when the access connection is ordered for installation at the same time as an AT&T Private Line SONET Service. The AT&T Private Line SONET Service IOC must remain in service for at least 12 months. If the IOC is disconnected prior to the 12 months, the customer is liable for a termination charge equal to the installation charge for the access connection.

ADMINISTRATIVELY
APPROVED FOR FILING

11. SONET SERVICES-INTEROFFICE

ORIGINAL

11.2 SERVICE COMPONENTS AND RATES (Cont'd)

11.2.2 OFFICE CONNECTIONS (Cont'd)

B. FUNCTION CONNECTION

A function connection provides the function, at an AT&T central office, of connecting an office function to an IOC, another office function, an AT&T service, or of connecting an IOC to an AT&T service as specified in 3.3.2B, preceding.

(See Price List for current rates)

11.2.3 OFFICE FUNCTIONS

A. SONET MULTIPLEXING

The SONET multiplexing office function provides for the transmission of multiple digital signals configured in either a office multiplexing, hubbing, linear add/drop configuration or ring configuration, for which the Customer has designated the configuration.

(See Price List for current rates.)

1. CHANNEL ACTIVATION OPTION

This permits the Customer to designate various AT&T Private Line SONET Service channels terminating in the interconnection of multiplexing office functions. An additional charge will apply, per termination, for three or more SONET Service terminations.

In addition, a nonrecurring reconfiguration charge applies per each change to an activated channel.

(See Price List for current rates.)

(These rates are billed in 15 minute increments.)

*Installation charges do not apply when the activated port is ordered for installation at the same time as the multiplexing office function.

ADMINISTRATIVELY
APPROVED FOR FILING

ORIGINAL

12. MISCELLANEOUS FUNCTIONS AND ARRANGEMENTS

12.1 GENERAL

This section contains miscellaneous functions and arrangements that are provided for use with private line services offered under this tariff.

12.1.1 REGULATIONS

In addition to the regulations in Section 2 preceding, the following applies.

A. MINIMUM PAYMENT PERIOD

Unless otherwise specified for an individual case, miscellaneous functions and arrangements are furnished for a minimum payment period of one month.

12.2 MISCELLANEOUS ARRANGEMENTS

12.2.1 1 X N CONTROL ARRANGEMENT

This arrangement enables the Customer to control up to 48 switching or transfer functions (e.g., switching or transfer arrangements to Voice Grade Services) at an AT&T Central Office via a remote keyboard terminal capable of either 300 or 1200 bps operation.

Access to the Control Arrangement requires an appropriate channel (e.g., local exchange line).

The Control Arrangement must be located in the same AT&T Central Office as the switching or transfer functions which it controls.

	USOC	MAXIMUM MONTHLY RATE[1]
- per arrangement	3DY	$161.70

NOTE 1: See Price List for current rates.

ADMINISTRATIVELY
APPROVED FOR FILING

12. MISCELLANEOUS FUNCTIONS AND ARRANGEMENTS

ORIGINAL

12.2 MISCELLANEOUS ARRANGEMENTS (Cont'd)

12.2.2 EMERGENCY POWER

Provides emergency power and signaling capability to access from an AT&T Central Office or provides emergency power only to access from an AT&T Central Office.

To provide emergency power and signaling capability to access from an AT&T Central Office.

	USOC	MAXIMUM MONTHLY RATE[1]	MAXIMUM NONRECURRING CHARGE[1]
- per access	H6JGV	$25.03	$93.50

To provide emergency power to access from an AT&T Central Office.

	USOC	MAXIMUM MONTHLY RATE[1]	MAXIMUM NONRECURRING CHARGE[1]
- per access	LKJ	$8.21	$93.50

12.2.3 AUTOMATIC EXCLUSION ARRANGEMENT

This arrangement permits the automatic exclusion of either of two access from a private line service. Both access must terminate at different customer's premises within the same rate center area. This arrangement requires the customer to provide two busy lamps at its premises.

	USOC	MAXIMUM MONTHLY RATE [1]	MAXIMUM NONRECURRING CHARGE [1]
- per access	H6L	$47.10	$93.50

NOTE 1: See Price List for current rates.

ADMINISTRATIVELY
APPROVED FOR FILING

12. MISCELLANEOUS FUNCTIONS AND ARRANGEMENTS

ORIGINAL

12.2 MISCELLANEOUS ARRANGEMENTS (Cont'd)

12.2.4 ANALOG/DIGITAL CONVERTER

An Analog/Digital Converter provides the conversion of an analog and digital signals. The Voice Grade Analog/Digital Converter connects a DATAPHONE Digital Service to a Voice Grade Service for transmission at 9.6 kbps. The DATAPHONE Digital Service and the Voice Grade Service must be operating at the same speed.

When a DATAPHONE Digital Service is connected to a Voice Grade Service office connections will be required as follows:

1. Connections in the same AT&T Central Office

   When the AT&T Central Offices of the DATAPHONE Digital Service and the Voice Grade Service are the same, a function connection for each service is required to connect the respective IOCs to the Analog/Digital Converter.

2. Connections in different AT&T Central Offices

   When the AT&T Central Offices of the DATAPHONE Digital Service and the Voice Grade Service are different but in the same LATA, the following apply:

   - A Voice Grade IOC between the two AT&T Central Offices,
   - A function connection to connect each respective service to the Analog/Digital Converter.

- per converter	USOC	MAXIMUM MONTHLY RATE [1]	MAXIMUM INSTALLATION CHARGE [1]
9.6 kbps	CVA	$517.00	None

Note: In addition, the Voice Grade Service must be equipped with high performance data conditioning.

Note 1: See Price List for current rates.

ADMINISTRATIVELY
APPROVED FOR FILING

12. MISCELLANEOUS FUNCTIONS AND ARRANGEMENTS

ORIGINAL

12.2 MISCELLANEOUS ARRANGEMENTS (Cont'd)

12.2.5 NETWORK MULTIPLEXING ARRANGEMENT

This arrangement provides the capability to derive up to 20 voice grade analog channels from a single 56 kbps digital Interoffice Channel (IOC). Each of the derived channels operates at a transmission speed of 2.4 kbps.

A DATAPHONE Digital Service Office Connection (see Section 10.2.2.) is required to connect the 56 kbps digital IOC to this arrangement.

	USOC	MAXIMUM MONTHLY RATE	MAXIMUM INSTALLATION CHARGE
- per arrangement	CDU	$7,200.00	$600.00

Note 1: See Price List for current rates.

ADMINISTRATIVELY
APPROVED FOR FILING

ORIGINAL

13. ADDITIONAL ADMINISTRATIVE AND OPERATIONAL FUNCTIONS

13.1 GENERAL

This section contains the rates and regulations for Additional Administrative and Operational Functions that may apply in connection with the installation, operation and maintenance of a private line service. The additional functions will be provided only when specifically ordered or requested by the Customer.

All of the Additional Administrative and Operational Functions are subject to the availability of personnel and equipment. In furnishing these functions, AT&T does not assume any additional responsibility for the through transmission of signals beyond that set forth in the following:

AT&T is responsible for engineering, operating and maintaining the private line services it provides. It is also responsible for the quality of transmission or signaling on private line services it provides.

13.1.1 TESTING FUNCTIONS

At the Customer's request, AT&T will review test results and participate with the Customer in a design review, technical analysis or testing.

A. REVIEW OF OTHER ACCESS TEST RESULTS

At the Customer's request, AT&T will review the results of tests of a Customer-provided access that is connected to a private line service. (The Customer must arrange for those results to be furnished to AT&T.) Where appropriate, AT&T will recommend additional tests to be performed on the Customer-provided access.

Review of test results will only be provided when the Customer agrees, in advance, to pay the charges for the review.

1. The rates for Review of Other Access Test Results are:

	USOC	MAXIMUM CHARGE [1]
- Per person, first half hour or fraction thereof	NRZT1	$107.64
- Per person, each additional half hour or fraction thereof	NRZT2	$ 58.85

NOTE 1: See Price List for current rates.

ADMINISTRATIVELY
APPROVED FOR FILING

13. ADDITIONAL ADMINISTRATIVE AND OPERATIONAL FUNCTIONS

ORIGINAL

13.1 GENERAL (Cont'd)

13.1.1 TESTING FUNCTIONS (Cont'd)

B. SPECIAL PARTICIPATIVE DESIGN REVIEW, TECHNICAL ANALYSIS AND TESTING

At the Customer's request, AT&T will participate with the Customer in Special Participative Design Review, Technical Analysis and Testing.

This function provides the Customer with design review, technical analysis and testing of an assembly consisting of a private line service and a Customer-provided access or channels obtained through the use of channel derivation equipment.

	USOC	MAXIMUM CHARGE [1]
- Per person, first half hour or fraction thereof	NRZTD	$107.64
- Per person, each additional half hour or fraction thereof	NRZTE	$ 58.85

C. CUSTOMER DIRECTED PARTICIPATIVE TESTING

At the Customer's request, AT&T will participate in the testing of an assembly, when tests are directed by the Customer.

1. Charges for testing activity performed within a given month on an assembly that contains a service furnished to the same Customer are:

	USOC	MAXIMUM CHARGE [1]
- Per person, per half hour or fraction thereof	NRZTF	$ 34.21

2. Bills for tests performed at the Customer's request during a given month will be issued monthly and may, at the option of the Customer, be rendered for tests on a single assembly or group of assemblies:

	USOC	MAXIMUM CHARGE [1]
- For each bill rendered	NRZTB	$ 48.79
- For each service in an assembly which has been tested and designated by the Customer to be included in a given bill	NRZTG	$ 11.72

NOTE 1: See Price List for current rates.

ADMINISTRATIVELY
APPROVED FOR FILING

13. ADDITIONAL ADMINISTRATIVE AND OPERATIONAL FUNCTIONS

ORIGINAL

13.1 GENERAL (Cont'd)

13.1.2 ADDITIONAL INSTALLATION/MAINTENANCE FUNCTIONS

AT&T will provide the following additional installation/maintenance functions for a private line service when ordered by the Customer.

A. OVERTIME INSTALLATION

Installation activities performed at times which require premium payment to installation personnel.

B. STAND-BY

Retention, at the Customer's request, of installation/maintenance personnel at the AT&T central office after completion of normal testing appropriate to the installation or repair of the private line service being provided.Additional installation/maintenance charges apply for all time in excess of 1/2 hour in such cases.

C. RATES

The rates for performing Additional Installation/Maintenance Functions are as follows:

	USOC	MAXIMUM CHARGE [1]
During normal working hours, per person		
- First half hour or fraction thereof	NRZMN	$ 83.05
- Each additional half hour or fraction thereof	NRZM1	$ 34.21
Outside of normal working hours, per person		
- First half hour or fraction thereof	NRZMO	$ 87.95
- Each additional half hour or fraction thereof	NRZM2	$ 39.16

When personnel are called out to provide Additional Installation/ Maintenance Functions during a previously excused work period which is not continuous with the employee's work period, a minimum charge of four (4) hours applies.

NOTE 1: See Price List for current rates.

ADMINISTRATIVELY
APPROVED FOR FILING

13. ADDITIONAL ADMINISTRATIVE AND OPERATIONAL FUNCTIONS

ORIGINAL

13.1 GENERAL (Cont'd)

13.1.3 ADDITIONAL ENGINEERING FUNCTIONS

A. PROVISION OF ADDITIONAL ENGINEERING

AT&T will provide the following Additional Engineering Functions when ordered by the Customer. Additional engineering will only be provided when:

1. A Customer requests additional technical information after AT&T has already provided the technical information normally included in the Design Layout Report (see 13.1.6, following).

2. A Customer requests the provision of engineering design or other activities which are not normally provided as part of the design and installation of a service.

B. RATES

	USOC	MAXIMUM CHARGE [1]
During normal working hours, per person		
- First half hour or fraction thereof	NRZEN	$ 89.10
- Each additional half hour or fraction thereof	NRZE1	$ 40.32
Outside of normal working hours, per person		
- First half hour or fraction thereof	NRZEO	$ 93.34
- Each additional half hour or fraction thereof	NRZE2	$ 44.50

13.1.4 DESIGN CHANGE CHARGE

A Design Change Charge applies each time a Customer requests a change of an order that results in a change in the design, operation or function of the private line service ordered. The Design Change Charge applies when a change in an order occurs after installation has started but prior to the due date.

	USOC	MAXIMUM CHARGE [1]
- Per design change, for each service	NRZDC	$136.40

NOTE 1: See Price List for current rates.

ADMINISTRATIVELY
APPROVED FOR FILING

13. ADDITIONAL ADMINISTRATIVE AND OPERATIONAL FUNCTIONS

ORIGINAL

13.1 GENERAL (Cont'd)

13.1.5 PROVISION OF A DESIGN LAYOUT REPORT

The Customer may order the design information pertaining to a private line service. This information is provided in a report referred to as a Design Layout Report. A charge applies for the provision of the Design Layout Report.

When a Design Layout Report has been ordered for a given private line service, revised information will be furnished at no charge if (1) the service design is subsequently altered and (2) that alteration changes the operating characteristics of the service as furnished in the initial report. However, if the design layout changes because a service has been modified in response to a Customer's order, a new Design Layout Report will be subject to the charge.

To the extent applicable, the Design Layout Report for a private line service includes the following information:

- Carrier channel bank type
- Carrier system mileage
- Channel lineup and maintenance levels
- Channel design signal levels
- The type transmission medium (e.g., terrestrial, satellite) used to provide the Interoffice Channel
- The expected measured loss
- The expected impedance at the demarcation point
- Use of echo control
- Type signaling used (e.g., E&M)

A. CHARGES

	USOC	MAXIMUM CHARGE 1
- Per private line service	NRZD1	$ 29.81
When the Design Layout Report is ordered subsequent to an order to install or rearrange the service, an additional Administrative Charge applies for each order		
- Administrative Charge	NRZDL	$104.83

NOTE 1: See Price List for current rates.

ADMINISTRATIVELY
APPROVED FOR FILING

13. ADDITIONAL ADMINISTRATIVE AND OPERATIONAL FUNCTIONS

ORIGINAL

13.1 GENERAL (Cont'd)

13.1.6 PROMOTIONAL OFFERINGS

From time to time, AT&T may provide certain special promotions to its Customers. These offerings may be limited to certain dates, times and locations. The ordering window for services obtained under such promotions will not exceed 90 days from the date the promotion begins.

13.1.7 TELECOMMUNICATIONS SERVICE PRIORITY (TSP) PROVISIONING/RESTORATION CHARGES

AT&T will arrange a private line service for TSP provisioning and/or restoration priority on receipt of certification in conformance with Part 64, Subpart D, Appendix A, of the FCC's Rules and Regulations.

When an order for a TSP provisioning priority if received, the following non-recurring charge applies.

	USOC	MAXIMUM CHARGE [1]
Per service for TSP restoration priority	NRZPP	$440.00

When an order for a TSP restoration priority is received, the following monthly and nonrecurring charges apply.

	USOC	MAXIMUM MONTHLY CHARGE [1]	MAXIMUM CHARGE [1]
Per service for TSP restoration priority	RSPER	$9.90	$258.50

When an order for a TSP restoration priority level change is received, the following nonrecurring charge applies.

	USOC	MAXIMUM CHARGE [1]
Per service for TSP restoration priority	NRZRS	$38.50

When a restoration priority is discontinued, no charge will apply.

NOTE 1: See Price List for current rates.

ADMINISTRATIVELY
APPROVED FOR FILING

14. RESERVED FOR FUTURE USE

ORIGINAL

ADMINISTRATIVELY
APPROVED FOR FILING

15. RESERVED FOR FUTURE USE

ORIGINAL

ADMINISTRATIVELY
APPROVED FOR FILING

ORIGINAL

ADMINISTRATIVELY
APPROVED FOR FILING

1. RESERVED FOR FUTURE USE

ORIGINAL

ADMINISTRATIVELY
APPROVED FOR FILING

2. RESERVED FOR FUTURE USE

ORIGINAL

ADMINISTRATIVELY
APPROVED FOR FILING

3. RESERVED FOR FUTURE USE

ORIGINAL

ADMINISTRATIVELY
APPROVED FOR FILING

4. RESERVED FOR FUTURE USE

ORIGINAL

ADMINISTRATIVELY
APPROVED FOR FILING

5. RESERVED FOR FUTURE USE

ORIGINAL

ADMINISTRATIVELY
APPROVED FOR FILING

6. RESERVED FOR FUTURE USE

ORIGINAL

ADMINISTRATIVELY
APPROVED FOR FILING

ORIGINAL

7. ACCUNET® T1.5 SERVICE-INTEROFFICE

CANCELLATION CHARGES

COMPONENT	USOC	APP	CRITICAL DATES SID	DLRD	RID	WOT	CTA	DD
INTEROFFICE CHANNEL (IOC)	NRZCN	$0	$73.48	$83.28	$112.66	$264.53	$489.83	$489.83
OFFICE CONNECTION	NRZCN	$0	$49.05	$55.59	$75.21	$176.58	$327.00	$327.00

INTEROFFICE CHANNEL (IOC)

USOC	MONTHLY CHARGES PER CHANNEL
1LNVX	ICB

OFFICE CONNECTIONS:

ACCESS CONNECTION

USOC	MONTHLY RATE	NONRECURRING CHARGE
041AC	ICB	ICB

FUNCTION CONNECTION

NRZFC	N/A	ICB

CHANNEL OPTIONS:

FIBER-ONLY ROUTING

USOC	NONRECURRING CHARGE
DY7FT	ICB

ENHANCED DIVERSITY ROUTING

	USOC	MONTHLY RATE	NONRECURRING CHARGE
- per each IOC relationship pair	DY7D1	ICB	ICB

ADMINISTRATIVELY
APPROVED FOR FILING

ORIGINAL

7. ACCUNET® T1.5 SERVICE-INTEROFFICE

TRANSFER ARRANGEMENT

	USOC	MONTHLY RATE
- per transfer arrangement	XTA++	ICB

M-24 MULTIPLEXING

	USOC	MONTHLY RATE	NONRECURRING CHARGE
- per M-24 multiplexing office function	MSF24	ICB	ICB

ARDS ACCESS

	USOC	MONTHLY RATE	NONRECURRING CHARGE
- per DS1 Switch Port	CUR++	ICB	ICB

AUTOMATIC PROTECTION CAPABILITY

	USOC	MONTHLY RATE
- per Automatic Protection Capability office function	APZ	ICB

NETWORK PROTECTION CAPABILITY

	USOC	MONTHLY RATE	NONRECURRING CHARGE
- per Protected IOC	APZNP	ICB	ICB

ADMINISTRATIVELY
APPROVED FOR FILING

ORIGINAL

8. ACCUNET® T45 SERVICE-INTEROFFICE

INTER OFFICE CHANNEL	MONTHLY CHARGES PER CHANNEL		
	USOC	FIXED	PER MILE
	1LNVX	ICB	ICB

SERVICE ASSURANCE WARRANTY

Length of Interruption	Credit per Interruption
1 minute up to, but not including, 1 hour	5.0%
1 hour up to, but not including, 2 hours	10.0%
2 hours up to, but not including, 3 hours	15.0%
3 hours up to, but not including, 4 hours	20.0%
4 hours up to, but not including, 5 hours	25.0%
5 hours up to, but not including, 6 hours	30.0%
6 hours up to, but not including, 7 hours	35.0%
7 hours up to, but not including, 8 hours	40.0%
8 hours up to, but not including, 9 hours	45.0%
Over 9 hours	50.0%

OFFICE CONNECTIONS	USOC	MONTHLY RATE	NONRECURRING CHARGE
A. ACCESS CONNECTION			
- per connection	041AC	ICB	ICB
B. FUNCTION CONNECTION			
- per connection	NRZFC	ICB	ICB
OFFICE FUNCTIONS			
A. M28 MULTIPLEXING			
- per M28 multiplexing office function	M2X	ICB	ICB
B. NETWORK PROTECTION CAPABILITY(NPC)			
- per IOC	APZNP	ICB	ICB
C. ACCESS PROTECTION CAPABILITY			
- per Access Protection Capability office function	APZ	ICB	ICB
D. SWITCH PORT			
- per DS3 Switch Port	CURD3	ICB	ICB
CHANNEL OPTIONS			
A. ENHANCED DIVERSITY ROUTING			
- per each IOC in each relationship pair	DY7D1	ICB	ICB

ADMINISTRATIVELY
APPROVED FOR FILING

9. ACCUNET® SPECTRUM OF DIGITAL SERVICES-INTEROFFICE

ORIGINAL

CANCELLATION CHARGES

COMPONENT	USOC	APP	CRITICAL DATES SID	DLRD	RID	WOT	CTA	DD
9.6 and 56 kbps IOC	NRZCN	0	$28.50	$32.30	$ 43.70	$102.61	$190.02	$190.02
All Other IOCs	NRZCN	0	$30.75	$34.85	$ 47.15	$110.71	$205.02	$205.02
9.6 kbps and 56 kbps Office Connection	NRZCN	0	$32.34	$36.65	$ 49.58	$116.42	$215.60	$215.60
All Other Office Connections	NRZCN	0	$82.50	$93.50	$126.50	$297.00	$550.00	$550.00

SELECT SAVINGS PLAN (SSP)

A. SSP STRUCTURE

Monthly rates for all elements will be discounted based on the term commitment as follows:

Term Commitment	Discount
12-23 Months	10%
24-35 Months	12%
36-60 Months	14%

D. DISCONTINUANCE OF A SSP - WITH LIABILITY

The Customer is liable for a percentage of the total non-discounted fixed monthly rates for the remaining portion as follows:

Term Commitment	Liability
1-12 Months	50%
13-24 Months	40%
25-36 Months	30%
37-48 Months	20%
40-60 Months	10%

ADMINISTRATIVELY
APPROVED FOR FILING

ORIGINAL

9. ACCUNET® SPECTRUM OF DIGITAL SERVICES-INTEROFFICE

INTEROFFICE CHANNEL (IOC)

The monthly charge for an IOC includes a fixed rate and a mileage sensitive rate.

	MILEAGE BAND	USOC	MONTHLY CHARGES PER CHANNEL FIXED	PER MILE
- per 9.6 kbps Channel	1- 50	1LNVX	$ 79.20	$ 3.13
	51-100		163.90	1.45
	101-over		272.80	0.36
- per 56/64 kbps Channel	1- 50	1LNVX	79.20	3.13
	51-100		163.90	1.45
	101-over		272.80	0.36
- per 128 kbps Channel	1- 50	1LNVX	151.80	5.94
	51-100		312.40	2.74
	101-over		519.20	0.68
- per 256 kbps Channel	1- 50	1LNVX	304.70	11.87
	51-100		623.70	5.48
	101-over		1037.30	2.32
- per 384 kbps Channel	1- 50	1LNVX	456.50	17.81
	51-100		936.10	8.22
	101-over		1557.60	2.01
- per 512 kbps Channel	1- 50	1LNVX	577.50	22.50
	51-100		1183.60	10.38
	101-over		1967.90	2.53
- per 768 kbps Channel	1- 50	1LNVX	866.80	33.74
	51-100		1775.40	15.57
	101-over		2951.30	3.81

ADMINISTRATIVELY
APPROVED FOR FILING

ORIGINAL

9. ACCUNET® SPECTRUM OF DIGITAL SERVICES-INTEROFFICE

OFFICE CONNECTIONS:

A. ACCESS CONNECTION

	USOC	PER LOCAL CHANNEL CHARGE MONTHLY RATE	NONRECURRING CHARGE
- per 9.6 kbps Channel	041AC	$25.00	$215.60
- per 56/64 kbps Channel	041AC	$25.00	$215.60
- per 128 kbps Channel	041AC	$33.00	$550.00
- per 256 kbps Channel	041AC	$38.50	$550.00
- per 384 kbps Channel	041AC	$44.00	$550.00
- per 512 kbps Channel	041AC	$49.50	$550.00
- per 768 kbps Channel	041AC	$55.00	$550.00

B. FUNCTION CONNECTION

	USOC	MONTHLY RATE	NONRECURRING CHARGE
- per connection			
- per 9.6 kbps Channel	NRZFC	N/A	$215.60
- per 56/64 kbps Channel	NRZFC	N/A	$215.60
- per 128 kbps Channel	NRZFC	N/A	$550.00
- per 256 kbps Channel	NRZFC	N/A	$550.00
- per 384 kbps Channel	NRZFC	N/A	$550.00
- per 512 kbps Channel	NRZFC	N/A	$550.00
- per 768 kbps Channel	NRZFC	N/A	$550.00

ADMINISTRATIVELY
APPROVED FOR FILING

ORIGINAL

9. ACCUNET® SPECTRUM OF DIGITAL SERVICES-INTEROFFICE

CHANNEL OPTIONS:

SPECIAL ROUTING OF AN ASDS
(Furnished subject to the availability of channel components.)

Diversity

	USOC	MONTHLY RATE
- Per IOC		
56/64 kbps	DY7DK	$ 50.00
128 kbps	DY7DK	$ 60.00
256 kbps	DY7DK	$ 70.00
384 kbps	DY7DK	$ 80.00
512 kbps	DY7DK	$ 90.00
768 kbps	DY7DK	$100.00

Avoidance

This option is only available on 56/64 kbps channels.

	USOC	MONTHLY RATE
- Per IOC	DY7AK	$ 68.00

ADMINISTRATIVELY
APPROVED FOR FILING

ORIGINAL

9. ACCUNET® SPECTRUM OF DIGITAL SERVICES-INTEROFFICE

CHANNEL OPTIONS:

Diversity and Avoidance

This option is only available on 56/64 kbps channels.

	USOC	MONTHLY RATE
- Per IOC	DY7BK	$ 68.00

Custom Diversity

	USOC	MONTHLY RATE
- per IOC		
56/64 kbps	DY7C5	$ 79.00
128 kbps	DY7C5	106.00
256 kbps	DY7C5	158.00
384 kbps	DY7C5	211.00
512 kbps	DY7C5	264.00
768 kbps	DY7C5	369.00

SUBRATE DATA MULTIPLEXING

	USOC	MONTHLY RATE
- Per SDM office function	SD005	$154.00

SIGNALING CAPABILITY

Signaling capability permits signals to be transmitted over a service but does not include the capability to initiate or receive those signals.

	USOC	MONTHLY RATE
- per IOC	SZGVX	NONE

ADMINISTRATIVELY
APPROVED FOR FILING

9. ACCUNET® SPECTRUM OF DIGITAL SERVICES-INTEROFFICE

ORIGINAL

CONDITIONING:

C-1 CONDITIONING

	USOC	MONTHLY RATE	NONRECURRING CHARGE
- two-point channel not arranged for switching, per IOC	P2W	NONE	NONE
- multipoint not arranged for switching, per IOC	PH7	NONE	NONE
- two-point channel arranged for switching at an AT&T Central Office, per IOC	P2X	NONE	NONE

C-2 CONDITIONING

	USOC	MONTHLY RATE	NONRECURRING CHARGE
- two-point channel not arranged for switching, per IOC	P3H	NONE	NONE
- multipoint not arranged for switching, per IOC	P3W	NONE	NONE
- two-point channel arranged for switching at an AT&T Central Office, per IOC	P3J	NONE	NONE
- multipoint channels arranged for switching	PH9	NONE	NONE

C-4 CONDITIONING

	USOC	MONTHLY RATE	NONRECURRING CHARGE
- two-point channel	P4W	NONE	NONE
- multipoint channel consisting of not more than four AT&T Customer's premises	P4V	NONE	NONE

ADMINISTRATIVELY
APPROVED FOR FILING

ORIGINAL

9. ACCUNET® SPECTRUM OF DIGITAL SERVICES-INTEROFFICE

CONDITIONING:

D-1 CONDITIONING

	USOC	MONTHLY RATE	NONRECURRING CHARGE
- per IOC	QHA	NONE	NONE

D-2 CONDITIONING

	USOC	MONTHLY RATE	NONRECURRING CHARGE
- per IOC	QHB	NONE	NONE

D-5 CONDITIONING

	USOC	MONTHLY RATE	NONRECURRING CHARGE
- per IOC	QHE	NONE	NONE

D-6 CONDITIONING

	USOC	MONTHLY RATE	NONRECURRING CHARGE
- per IOC	QHED6	NONE	$737.00

ADMINISTRATIVELY
APPROVED FOR FILING

ORIGINAL

9. ACCUNET® SPECTRUM OF DIGITAL SERVICES-INTEROFFICE

CONDITIONING:

TONE CONTROL CONDITIONING

	USOC	MONTHLY RATE	NONRECURRING CHARGE
- per IOC	GN3++	NONE	NONE

CUSTOMER REQUESTED ECHO CONTROL

- per IOC	USOC	MONTHLY RATE	NONRECURRING CHARGE
- When installed at the same time as the IOC	EKOSF	$29.75	NONE
- When installed subsequently	EKOSA	29.75	$ 87.25

OFFICE FUNCTIONS:

ASDS SWITCH PORT

Customer Controlled Reconfiguration

	SPEED	USOC	MONTHLY RATE	NONRECURRING CHARGE
- per ASDS Switch Port	56/64 kbps	CURCR	$ 30.00	$ 22.00
	128 kbps	CURCR	60.00	32.00
	256 kbps	CURCR	110.00	43.00
	384 kbps	CURCR	160.00	64.00
	512 kbps	CURCR	210.00	86.00
	768 kbps	CURCR	280.00	129.00

DS1 Switch Port - When a DS1 Switch Port is required, refer to Section 5.2.4.D, preceding.

ADMINISTRATIVELY
APPROVED FOR FILING

ORIGINAL

9. ACCUNET® SPECTRUM OF DIGITAL SERVICES-INTEROFFICE

TRANSFER ARRANGEMENTS:

PRIVATE LINE SERVICE TRANSFER ARRANGEMENT

	USOC	MONTHLY RATE
- per service	XTAOC	$29.50

TRANSFER ARRANGEMENT WITH ALTERNATE DISCONNECT

	USOC	MONTHLY RATE
- per arrangement	XTAAC	$24.50

TRANSFER ARRANGEMENT WITHOUT ALTERNATE DISCONNECT

	USOC	MONTHLY RATE	NONRECURRING CHARGE
- per arrangement	XTAWD	$24.50	$52.50

TRANSFER ARRANGEMENT WITH ALTERNATE DISCONNECT AND BUSYTONE

	USOC	MONTHLY RATE
- per arrangement	XTAAB	$24.50

TRANSFER ARRANGEMENT WITH ALTERNATE DISCONNECT AND INTERCEPT

	USOC	MONTHLY RATE	NONRECURRING CHARGE
- per arrangement	36B	$29.50	$ 8.80

EXCLUSION ARRANGEMENT

	USOC	MONTHLY RATE
- per interoffice channel, voice grade local channel, or other analog access arranged	XTAEX	$24.50

1 X N CHANNEL SWITCH

	USOC	MONTHLY RATE	NONRECURRING CHARGE
- per Nest (capacity-20 channel cards)	3DYXN	$136.00	$136.00
- per Channel Card (capacity-one switching function)	3DYCC	22.00	NONE

ADMINISTRATIVELY
APPROVED

ORIGINAL

9. ACCUNET® SPECTRUM OF DIGITAL SERVICES-INTEROFFICE

ANALOG MULTIPOINT CHARGE

	USOC	MONTHLY RATE
- per termination	MPC	$ 3.30

INSTALLATION CHARGE WAIVER

Installation charges will be waived for the Access Connection, Function Connection, D6 Inter Office Channel (IOC) Data Conditioning and the Local Channel and Access Coordination Function (provided under AT&T's Arizona Private Line Price List Local Channel Services Schedule 11) for Customers who order new ACCUNET Spectrum of Digital Service (ASDS) with IOC, used in conjunction with Voice Grade Local Channel Service (VGLC), or ACCUNET Generic Digital Access Service (GDA). Installation charges for the Voice Grade Local Channel C and D Type Data Conditioning are included.

In order for a Customer to qualify for the waived installation charges when ordering a new Terrestrial 1.544 Mbps Local Channel Service, the Terrestrial 1.544 Local Channel Service must be connected through the M24 multiplexing office function to a minimum of one new ASDS IOC at speeds of 128 kbps and above or to a minimum of two new ASDS IOCs at speeds of between 56 kbps and 64 kbps and the IOCs must be ordered simultaneously with the new Terrestrial 1.544 Mbps Local Channel Service.

Excluded from the installation charge waiver are:

- IOC or Local Channel signaling capability
- Replacement of existing service with a service of the same type and speed
- Additions to and/or rearrangements to existing services
- Digital Data Local Channels

A Customer who discontinues service prior to 12 full months will be billed for the waived charges.

However, a Customer may discontinue service without liability for waived charges to (1) replace a Voice Grade Local Channel Service with a digital service or (3) replace a digital service with a new digital service of a higher speed.

ADMINISTRATIVELY
APPROVED FOR FILING

ORIGINAL

10. DATAPHONE DIGITAL SERVICE*-INTEROFFICE

CANCELLATION CHARGES

CRITICAL DATES	Inter-office Channel Rate	USOC	Office Connection Rate	USOC
APP	0	NRZCN	0	NRZCN
SID	$ 35.00		$ 25.05	
DLRD	40.00		28.39	
RID	84.00		38.41	
WOT	130.00		90.18	
CTA	200.00		167.00	
DD	200.00		167.00	

INTEROFFICE CHANNEL

MONTHLY CHARGES PER CHANNEL

9.6 kbps Mileage Band	USOC	FIXED	PER MILE
1-50	1LNVX	$ 46.00	$ 1.65
51-100		76.60	1.05
Over 100		81.65	1.00

56 kbps Mileage Band	USOC	FIXED	PER MILE
1-50	1LNVX	$260.00	$ 5.00
51-100		310.00	4.00
Over 100		385.00	3.25

* DATAPHONE DIGITAL SERVICE may no longer be ordered for new Customers or for additional orders received from existing Customers after September 15, 2003. DATAPHONE DIGITAL SERVICE in place or on order before September 15, 2003 will remain in effect until discontinued or canceled by the Customer.

ADMINISTRATIVELY
APPROVED FOR FILING

ORIGINAL

10. DATAPHONE DIGITAL SERVICE-INTEROFFICE

OFFICE CONNECTIONS

A. ACCESS CONNECTION

-Per access connection	USOC	MONTHLY RATE	INSTALLATION CHARGE
9.6 kbps	O41AC	$21.30	$167.00
56 kbps	O41AC	$53.25	$252.00

B. FUNCTION CONNECTION

-Per function connection	USOC	INSTALLATION CHARGE
9.6 kbps	NRZFC	$167.00
56 kbps	NRZFC	$252.00

CHANNEL OPTIONS

A. SPECIAL ROUTING OF A DATAPHONE DIGITAL SERVICE

(a) 56 kbps Service Diversity

	USOC	MONTHLY RATE	INSTALLATION CHARGE
- Per IOC	DY7D5	$106.00	$204.00

ADMINISTRATIVELY
APPROVED FOR FILING

10. DATAPHONE DIGITAL SERVICE-INTEROFFICE

ORIGINAL

CHANNEL OPTIONS:

A. SPECIAL ROUTING OF A DATAPHONE DIGITAL SERVICE (Cont'd)

(b) Diversity From Other Types of Services

	USOC	MONTHLY RATE	INSTALLATION CHARGE
- Per IOC	DY7O5	$106.00	$204.00

OFFICE FUNCTIONS:

A. SUBRATE DATA MULTIPLEXING

	USOC	MONTHLY RATE	INSTALLATION CHARGE
- Per Multiplexing Office function SDM 5	SDOO5	$154.00	

B. MULTI-SERVICE OFFICE FUNCTION

1. Analog to Digital Converter

	USOC	Monthly Rate
- Per arrangement	DTRTA	$32.67

ADMINISTRATIVELY
APPROVED FOR FILING

11. SONET SERVICES-INTEROFFICE

ORIGINAL

CANCELLATION CHARGE

COMPONENT	USOC	APP	SID	CRITICAL DATES DLRD	RID	WOT	CTA	DD
OC3 IOC	NRZCN	0	$5,000	$20,000	$30,000	$35,000	$37,500	$40,000
OC3 OC	NRZCN	0	$500	$1,000	$2,000	$2,500	$2,750	$3,000
OC12 IOC	NRZCN	0	$20,000	$80,000	$120,000	$140,000	$150,000	$160,000
OC12 OC	NRZCN	0	$2,000	$4,000	$8,000	$10,000	$11,000	$12,000

The applicable charge is based on the last scheduled critical date reached in the service order process.

INTEROFFICE CHANNEL

A. RATES

	USOC	Monthly
- per OC3	1LNVX	ICB
- per OC12	1LNVX	ICB

B. TERMINATION CHARGE

A termination charge will apply if the customer terminates service prior to the end of the term specified.

OFFICE CONNECTIONS

A. ACCESS CONNECTION

	USOC	MONTHLY	INSTALLATION CHARGE
- per OC3 connection	041AC	ICB	ICB
- per OC12 connection	041AC	ICB	ICB

B. FUNCTION CONNECTION

	USOC	INSTALLATION CHARGE
- per OC3 connection	NRZFC	ICB
- per OC12 connection	NRZFC	ICB

ADMINISTRATIVELY APPROVED

ORIGINAL

11. SONET SERVICES-INTEROFFICE

OFFICE FUNCTIONS

A. SONET MULTIPLEXING

	USOC	MONTHLY
- Per SONET Multiplexing office function	M5X	ICB

1. CHANNEL ACTIVATION OPTION

	SPEED	USOC	MONTHLY	INSTALLATION* CHARGE
- Per activated port	DS1	PAC15	ICB	ICB
	DS3	PAC45	ICB	ICB
	OC3	PAC55	ICB	ICB
	OC12	PAC12	ICB	ICB

			NONRECURRING CHARGE
- Reconfiguration Charge per activated port	DS1	NRZ15	ICB
	DS3	NRZ45	ICB
	OC3	NRZ55	ICB
	OC12	NRZ12	ICB

(These rates are billed in 15-minute increments.)

*Installation charges do not apply when the activated port is ordered for installation at the same time as the multiplexing office function.

ADMINISTRATIVELY
APPROVED FOR FILING

ORIGINAL

12. MISCELLANEOUS FUNCTIONS AND ARRANGEMENTS

1 X N CONTROL ARRANGEMENT

	USOC	MONTHLY RATE
- per arrangement	3DY	$147.00

EMERGENCY POWER

To provide emergency power and signaling capability to access from an AT&T Central Office.

	USOC	MONTHLY RATE	NONRECURRING CHARGE
- per access	H6JGV	$ 22.75	$85.00

To provide emergency power to access from an AT&T Central Office.

	USOC	MONTHLY RATE	NONRECURRING CHARGE
- per access	LKJ	$ 11.10	$85.00

AUTOMATIC EXCLUSION ARRANGEMENT

	USOC	MONTHLY RATE	NONRECURRING CHARGE
- per access	H6L	$ 41.00	$85.00

ANALOG/DIGITAL CONVERTER

	USOC	MONTHLY RATE	NONRECURRING CHARGE
- per converter 9.6 kbps	CVA	$470.00	NONE

NETWORK MULTIPLEXING ARRANGEMENT

	USOC	MONTHLY RATE	NONRECURRING CHARGE
- per arrangement	CDU	$6,000.00	$500.00

ADMINISTRATIVELY
APPROVED FOR FILING

13. ADDITIONAL ADMINISTRATIVE AND OPERATIONAL FUNCTIONS

ORIGINAL

REVIEW OF OTHER ACCESS TEST RESULTS

	USOC	CHARGE
- Per person, first half hour or fraction thereof	NRZT1	$101.00
- Per person, each additional half hour or fraction thereof	NRZT2	$ 55.00

SPECIAL PARTICIPATIVE DESIGN REVIEW, TECHNICAL ANALYSIS AND TESTING

	USOC	CHARGE
- Per person, first half hour or fraction thereof	NRZTD	$101.00
- Per person, each additional half hour or fraction thereof	NRZTE	$ 55.00

CUSTOMER DIRECTED PARTICIPATIVE TESTING

Testing activity performed within a given month on an assembly

	USOC	CHARGE
- Per person per half hour or fraction thereof	NRZTF	$32.00

Bills for tests performed at the Customer's request during a given month

	USOC	CHARGE
- For each bill rendered	NRZTB	$45.50
- For each service in an assembly which has been tested and designated by the Customer to be included in a given bill	NRZTG	$11.00

ADMINISTRATIVELY APPROVED FOR FILING

ORIGINAL

13. ADDITIONAL ADMINISTRATIVE AND OPERATIONAL FUNCTIONS

ADDITIONAL INSTALLATION/MAINTENANCE FUNCTIONS

Overtime installation and stand-by

	USOC	CHARGE
During normal working hours, per person		
- First half hour or fraction thereof	NRZMN	$77.50
- Each additional half hour or fraction thereof	NRZM1	$32.00
Outside of normal working hours, per person		
- First half hour or fraction thereof	NRZMO	$82.00
- Each additional half hour or fraction thereof	NRZM2	$36.50

ADDITIONAL ENGINEERING FUNCTIONS

	USOC	CHARGE
During normal working hours, per person		
- First half hour or fraction thereof	NRZEN	$ 83.00
- Each additional half hour or fraction thereof	NRZE1	$ 37.75
Outside of normal working hours, per person		
- First half hour or fraction thereof	NRZEO	$ 87.00
- Each additional half hour or fraction thereof	NRZE2	$ 41.50

DESIGN CHANGE CHARGE

	USOC	CHARGE
- Per design change, for each service	NRZDC	$128.00

ADMINISTRATIVELY
APPROVED FOR FILING

ORIGINAL

13. ADDITIONAL ADMINISTRATIVE AND OPERATIONAL FUNCTIONS

PROVISION OF A DESIGN LAYOUT REPORT

	USOC	CHARGE
- Per private line service	NRZD1	$ 28.00
When the Design Layout Report is ordered subsequent to an order to install or rearrange the service, an additional Administrative Charge applies for each order		
- Administrative Charge	NRZDL	$ 97.75

TELECOMMUNICATIONS SERVICE PRIORITY (TSP) PROVISIONING/RESTORATION CHARGES

	USOC	CHARGE	
- per service for TSP provisioning priority	NRZPP	$400.00	
		MONTHLY CHARGE	CHARGE
- per service for TSP restoration priority	RSPER	$9.00	$235.00
		CHARGE	
- per service for TSP restoration priority level change	NRZRS	$35.00	

ADMINISTRATIVELY
APPROVED FOR FILING

14. RESERVED FOR FUTURE USE

ORIGINAL

ADMINISTRATIVELY
APPROVED FOR FILING

15. RESERVED FOR FUTURE USE

ORIGINAL

ADMINISTRATIVELY
APPROVED FOR FILING